WORLDLAWN®
POWER EQUIPMENT

Venom

PARTS MANUAL

WYS48FX730VX	**WYS52FX730VX**	**WYS60FX730VX**
WYS48FX730VXCA	**WYS52FX730VXCA**	**WYS60FX730VXCA**

WORLDLAWN POWER EQUIPMENT, INC.

WORLDLAWNPOWEREQUIPMENT.COM

401 COMMERCE STREET

BEATRICE, NE 68310

800-267-4255

FAX – 402-223-4103

Contents

48” CASTER ASSEMBLY 7
52” – 60” CASTER ASSEMBLY 8
CONTROL ASSEMBLY LH 9
CONTROL ASSEMBLY RH 11
UPPER HANDLE ASSEMBLY 13
MAIN FRAME 15
PUMP IDLER ASM 18
UPPER FRAME ASSEMBLY 19
LIFT LEVER ASSEMBLY 22
FLOATING IDLER BAR 23
FLOATING IDLER ASSEMBLY 24
LEG PAD ASSEMBLY 25
FUEL TANK ASSEMBLY 26
48” DECK ASSEMBLY 27
52” DECK ASSEMBLY 30
60” DECK ASSEMBLY 33
DRIVE IDLER ASSEMBLY 36
BLADE SPINDLE ASSEMBLY 37
IDLER PULLEY ARM ASSEMBLY 38
DECK PULLEY ASSEMBLY 40
PARK BRAKE ASSEMBLY 41
ENGINE GROUP 43
DRIVE ASSEMBLY 45
WIRE HARNESS 47
DECAL GROUP 48

48” CASTER ASSEMBLY

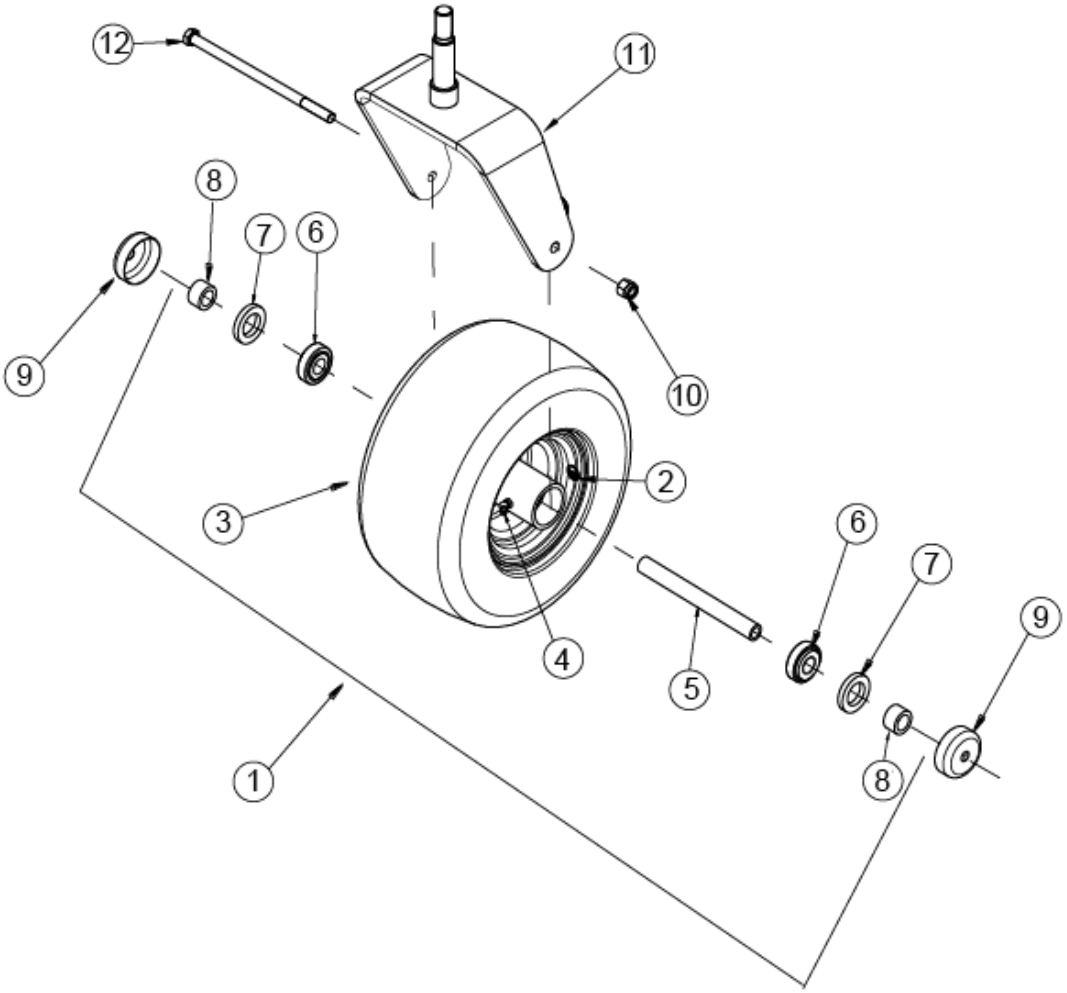

ITEM	PART NO.	DESCRIPTION
1	632068	ASM, BLK WHEEL COMPLETE 13 X 5.0-6 PNEUMATIC
2	453389	DECAL, FRONT TIRE PRESSURE
3	5202039	TIRE, 13 X 5.0-6 PNEUMATIC
4	B1153-8	GREASE FITTING M8X1X45
5	5202038	BUSHING
6	5202037	BEARING, TAPERED ROLLER
7	5202036	SEAL, LIP
8	5202035	BUSHING
9	5202026	CAP, DUST
10	B6182-12	NUT, NYLOC M12
11	5202150	CASTER WHEEL YOKE
12	5202029	SCREW, HH CAP M12 X 185

52” – 60” CASTER ASSEMBLY

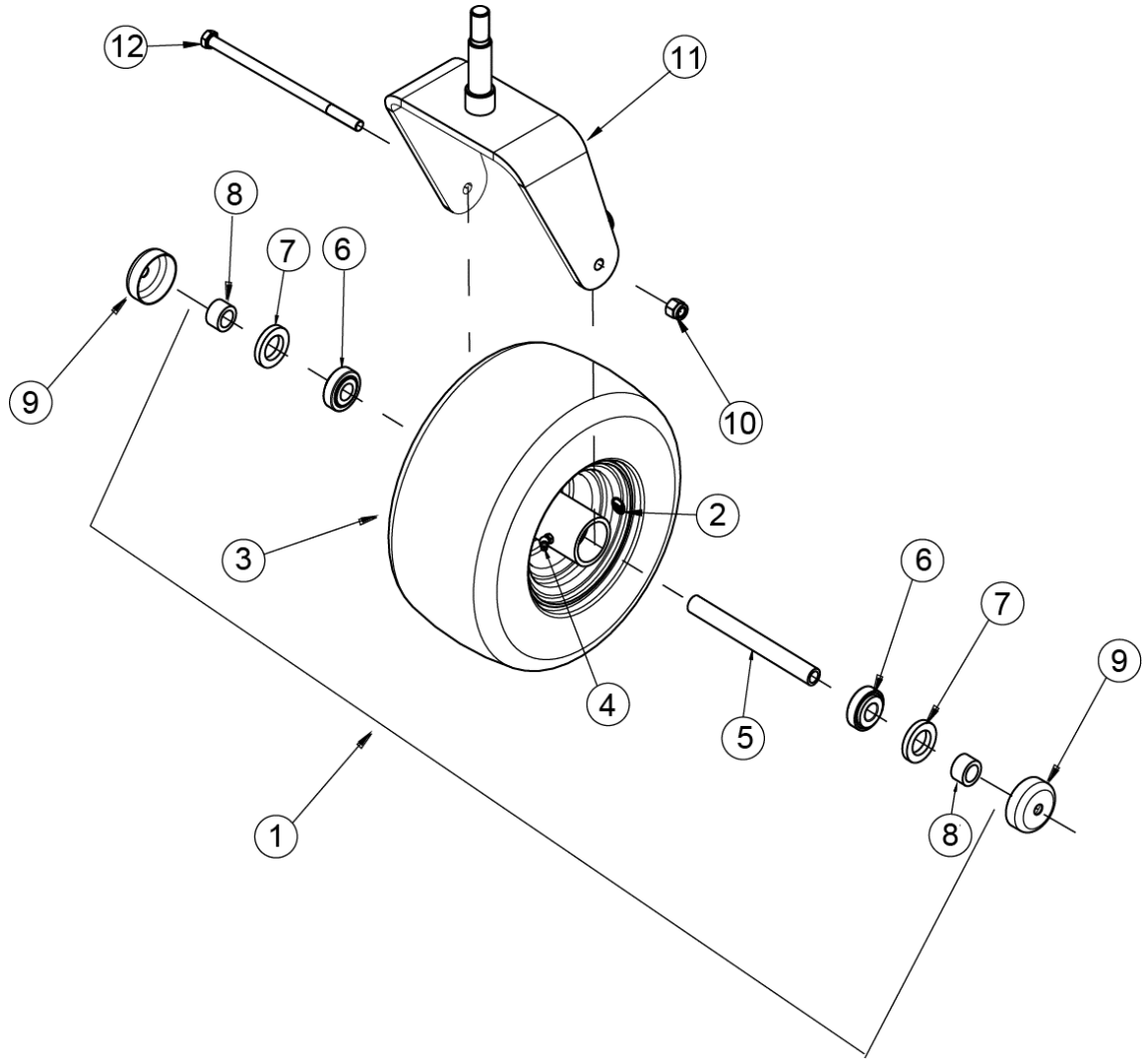

ITEM	PART NO.	DESCRIPTION
1	632041	ASM, BLK WHEEL COMPLETE W/BEARINGS
2	453389	DECAL, FRONT TIRE PRESSURE
3	542007	TIRE, 13 X 6.5-6 PNEUMATIC
4	111009	ZERK, 45° 1/4-28
5	543230	TUBE, AXLE
6	5202037	BEARING, TAPERED ROLLER
7	5202036	SEAL, LIP
8	5202035	BUSHING
9	5202026	CAP, DUST
10	B6182-12	NUT, NYLOC M12
11	542011-2	WLD, CASTER FORK 6.5, RED
12	543189	BOLT, M12 X 225 MM

CONTROL ASSEMBLY LH

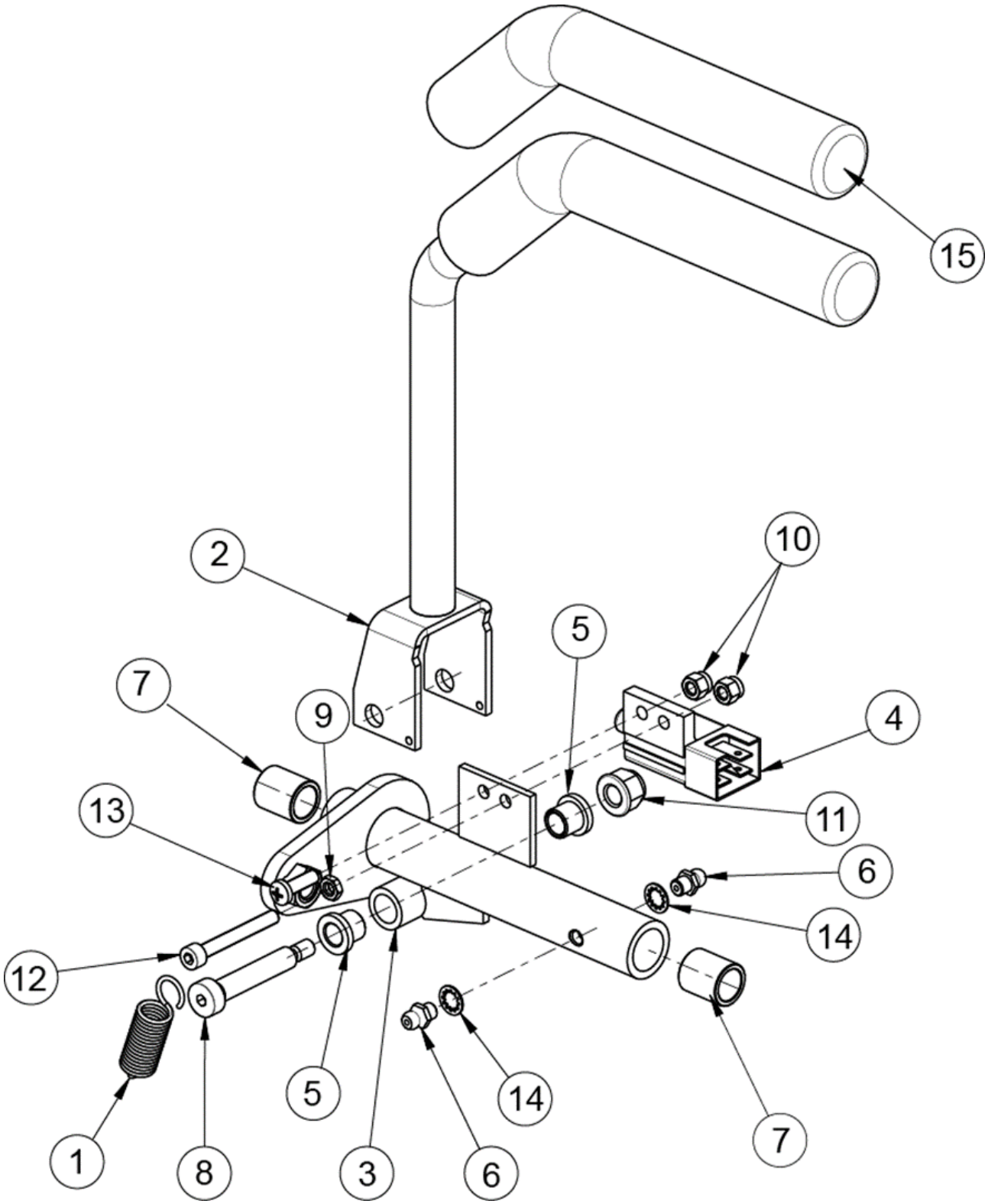

CONTROL ASSEMBLY LH

ITEM	PART NO.	DESCRIPTION
1	363155	OPC SPRING
2	452081	HANDLE W/GRIP
3	462219	WLD, 52 LH HANDLE PIVOT
4	523034	PARK SWITCH
5	2806010	NYLON BUSHING
6	B1152-6	GREASE FITTING M6
7	B2685-121618	OILITE BRONZE BEARING 12X16X18
8	B5281-840	SHOULDER BOLT
9	B6172-5	NUT, JAM M5
10	B6182-5	NUT, NYLOC M5
11	B6183-8	NUT, FLANGED NYLOC M8
12	B70-540	SCREW M5X40
13	B823-516	SCREW M5X16
14	B861.1-6	INT TOOTH LOCKWASHER 6
15	463805	HANDLE GRIP 215MM

CONTROL ASSEMBLY RH

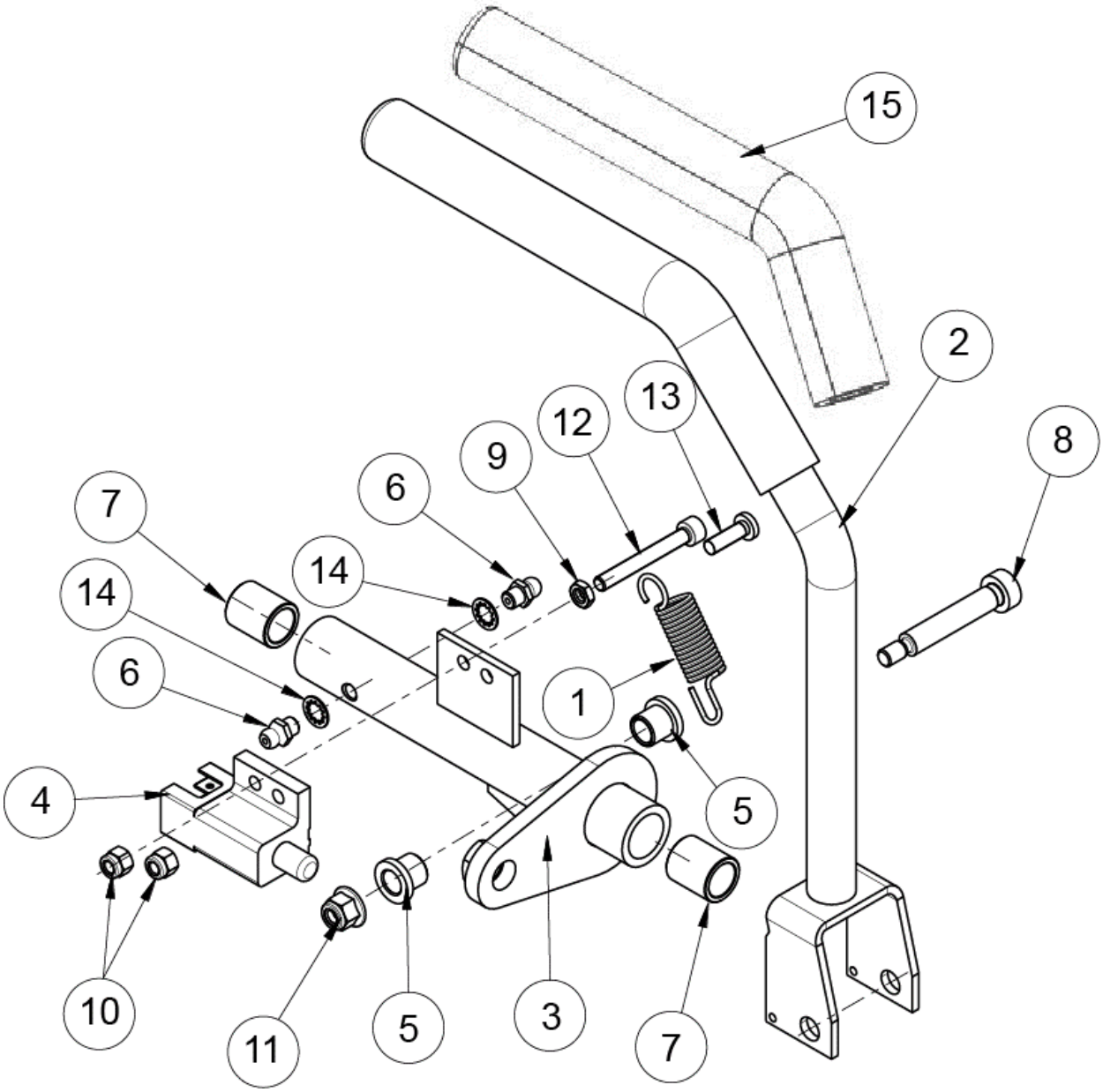

CONTROL ASSEMBLY – RH

ITEM	PART NO.	DESCRIPTION
1	363155	OPC SPRING
2	452081	HANDLE W/GRIP
3	462220	WLD, 52 RH HANDLE PIVOT
4	523034	PARK SWITCH
5	2806010	NYLON BUSHING
6	B1152-6	GREASE FITTING M6
7	B2685-121618	OILITE BRONZE BEARING 12X16X18
8	B5281-840	SHOULDER BOLT
9	B6172-5	NUT, JAM M5
10	B6182-5	NUT, NYLOC M5
11	B6183.1-6	FLANGED LOCKNUT M6
12	B70-540	SCREW M5X40
13	B823-516	SCREW M5X16
14	B861.1-6	INT TOOTH LOCKWASHER 6
15	463805	HANDLE GRIP 215MM

UPPER HANDLE ASSEMBLY

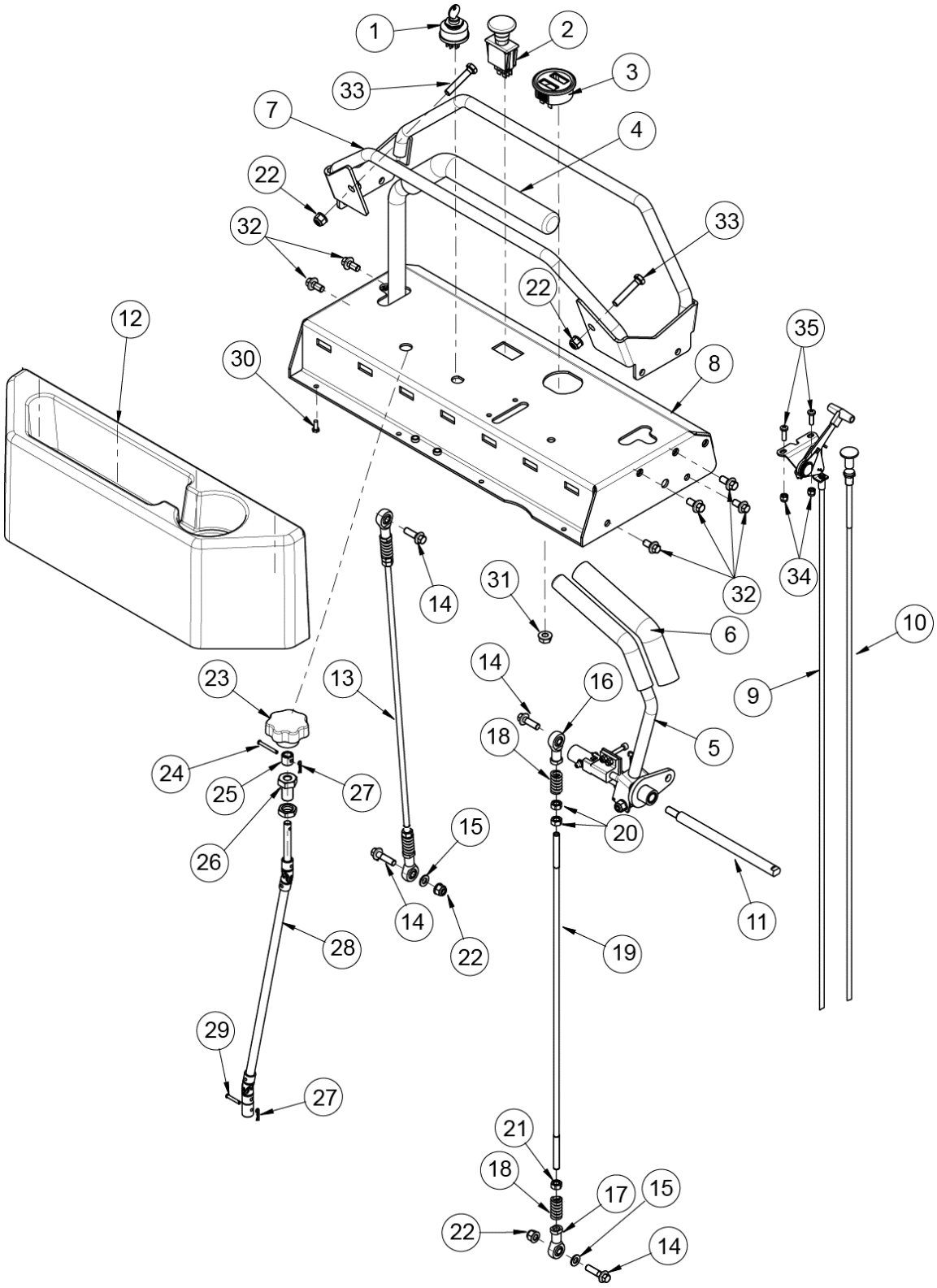

UPPER HANDLE ASSEMBLY

ITEM	PART NO.	DESCRIPTION
1	423027	IGNITION SWITCH
2	523031	PTO SWITCH
3	463766	GAUGE, HOUR/FUEL
4	464137	ASM, 52 RH DRIVE HANDLE DETAIL PG 7
5	464136	ASM, 52 LH DRIVE HANDLE DETAIL PG 9
6	463805	HANDLE GRIP 215MM
7	462253-2	WLD, REFERENCE BAR
8	462278	WLD, 52 CONTROL PANEL W/DECALS
9	463555	THROTTLE CONTROL - CONSOLE
10	463554	CABLE, CHOKE
11	453237	PIN, CONTROL PIVOT
12	463539	TRAY, UTILITY
13	464138	ASM, 52 SO PUMP ROD
14	B5787-830	SCREW, HH FLANGE M8X30
15	B97.1-8	WASHER 8
16	5205016	ROD END, SPHERICAL M8 RH SIBJK8S
17	5205017	ROD END, SPHERICAL M8 LH SILBJK8S
18	5205003	SPRING, COMPRESSION
19	463673	ROD, 52 SO PUMP CONTROL
20	B6171-8	NUT M8
21	B6171-8L	NUT M8X1 (LH)
22	B6183-8	NUT, FLANGED NYLOC M8
23	B7274.4-16063	KNOB, 16 X 63
24	B882-4035B	PIN, 4 X 35 CLEVIS
25	463675	SPACE, FLEXIBLE SHAFT
26	463674	MOUNT, FLEXIBLE SHAFT
27	2ZS6-049001	HAIR PIN COTTER
28	462221	FLEXIBLE DRIVE SHAFT
29	B882-4024B	PIN, 4 X 24 CLEVIS
30	103003	#10-14 X 1/2 PP PLASTITE
31	109008	3/8-24 WHIZLOCK NUT
32	B5787-816	SCREW, HH FLANGE M8X16
33	B5783-845	BOLT M8X45
34	B6182-5	NUT, NYLOC M5
35	B823-516	SCREW M5X16

MAIN FRAME

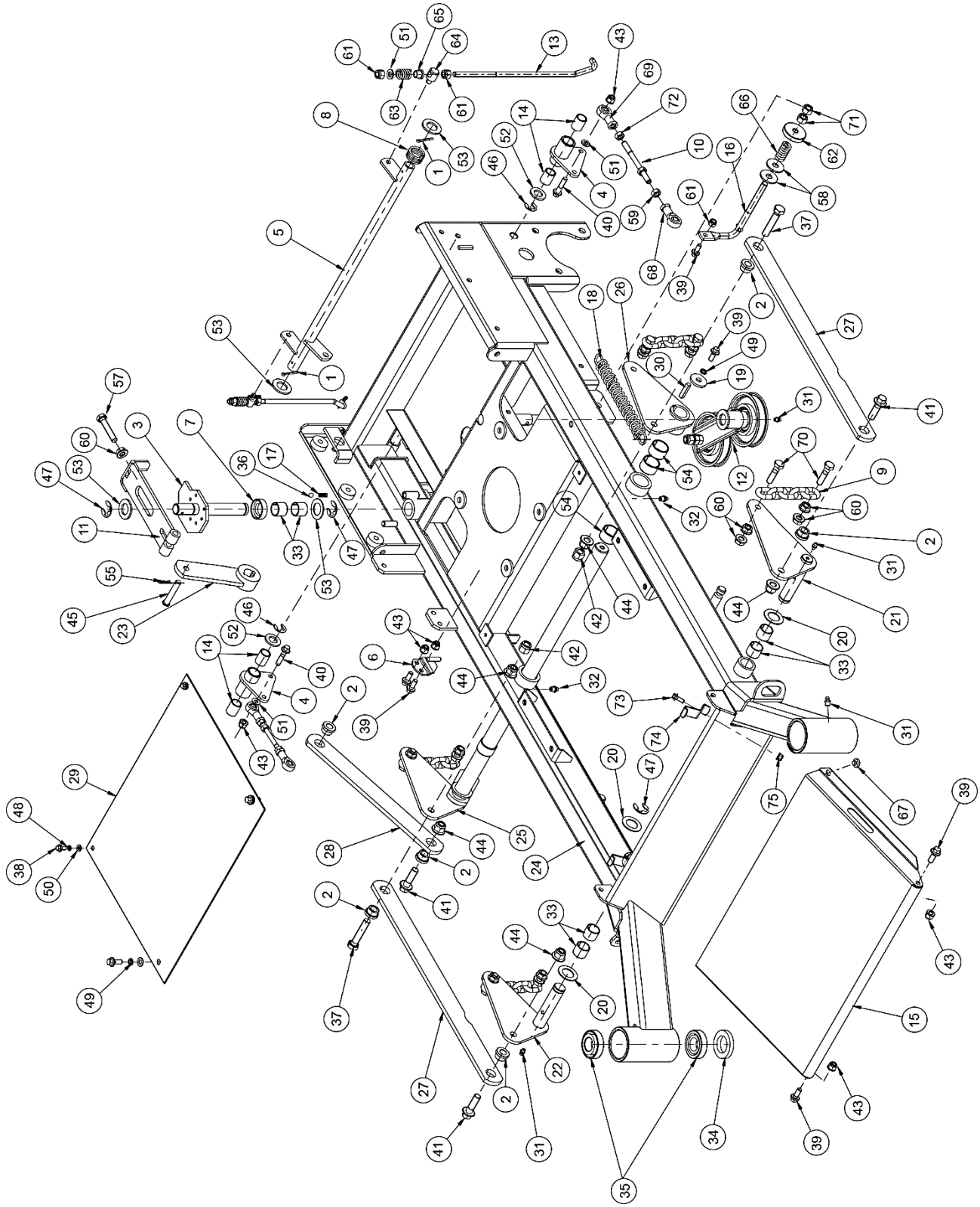

MAIN FRAME

ITEM	PART NO.	DESCRIPTION
1	106763	1/8 X 1-1/4 COTTER PIN
2	453288	BUSHING
3	462123	WLD, LIFT STOP CAM
4	462144	ASM, PUMP CNTL CRANK
5	462202	WLD, BRAKE SHAFT
6	462203	WLD, CLUTCH STOP
7	463188	SPACER, CAM HUB
8	463538	SPRING, TORSION
9	463320	CHAIN, DECK
10	462179	ASM, SHORT PUMP LINK
11	464104	ASM, CAM SLIDE
12	REFERENCE ONLY	ASM, 52 SO PUMP IDLER DETAIL ON PG 16
13	463629	LINK, 52 SO BRAKE RH
14	B2685-162025	OILITE BRONZE BEARING 16X20X25
15	462273	PAN, FRONT COVER W/DECALS
16	463631	PIN, REAR TENSION ARM
17	2804038	DETENT SPRING
18	543520	EXTENSION SPRING
19	463811	WASHER, 9 X 32 X 4
20	5202020	WASHER
21	462125-2	WLD, RH FRONT LIFT CRANK
22	462126-2	WLD, LH FRONT LIFT CRANK
23	462282-1	WLD, HGT STOP ARM
24	462274	WLD, 48/52/60 MAIN FRAME W/DECALS
25	462259-2	WLD, CROSS SHAFT REAR
26	462260-2	WLD, BRACKET REAR
27	463625-2	LINK, LONG LIFT
28	463626-2	LINK, SHORT LIFT
29	463762-2	CENTER COVER
30	B1096-B832	KEY 8 X 32 TYPE B
31	B1152-6	GREASE FITTING M6
32	B1152-8	GREASE FITTING 8MM
33	B12613-252220	BUSHING 25X22X20
34	B13871-B32528	SEAL (F) 32X52X8
35	B297-30205	BEARING 30205
36	B308-4	BALL SR4
37	B5783-1260	SCREW, HH TAP M12 X 60
38	B5787-612	SCREW, FLANGED HH M6 X 12
39	B5787-820	SCREW, HH FLANGE M8X20
40	B5787-835	BOLT, M8 X 35 FLANGE HEAD
41	B5787-1240	SCREW, HH FLANGED M12 X 40
42	B6182-12	NUT, NYLOC M12
43	B6183-8	NUT, FLANGED NYLOC M8
44	B6183-12	NUT, NYLOC FLANGE M12
45	B882-1055B	PIN, M10 X 55 CLEVIS
46	B896-12	SNAP RING 12

MAIN FRAME

ITEM	PART NO.	DESCRIPTION
47	B896-15	SNAP RING 15
48	B93-6	LOCKWASHER 6
49	B93-8	LOCKWASHER 8
50	B97.1-6	WASHER 6
51	B97.1-8	WASHER 8
52	B97.1-16	WASHER 16
53	B97.1-20	WASHER 20
54	B12613-322820	BUSHING 32 X 28 X 20
55	XSZ56-1-17	HAIR PIN
56	B6177-10	NUT, FLANGED M10
57	B5786-1055B	SCREW, HH TAP M10 X 1.25 X 55
58	B96-12	WASHER, FLAT LARGE M12
59	B6171-8	NUT M8
60	B6177.2-10	NUT, SERRATED FLANGE M10 X 1.25MM
61	B6182-8	NUT, NYLOC M8
62	463632	NUT, HAND M12
63	2800017	COMPRESSION SPRING
64	2800020	BRAKE SWIVEL
65	2806010	NYLON BUSHING
66	3332005	COMPRESSION SPRING
67	5203907	BUMPER, RUBBER
68	5205016	ROD END, SPHERICAL M8 RH SIBJK8S
69	5205017	ROD END, SPHERICAL M8 LH SILBJK8S
70	B5782-1040	SCREW, HH M10x40
71	B6170-12	NUT M12
72	B6171-8L	NUT M8X1 (LH)
73	B5787-616	SCREW, HH FLANGE M6X16
74	463804-2	STOP, FRONT COVER RED
75	B6183.1-6	FLANGED LOCKNUT M6

PUMP IDLER ASM

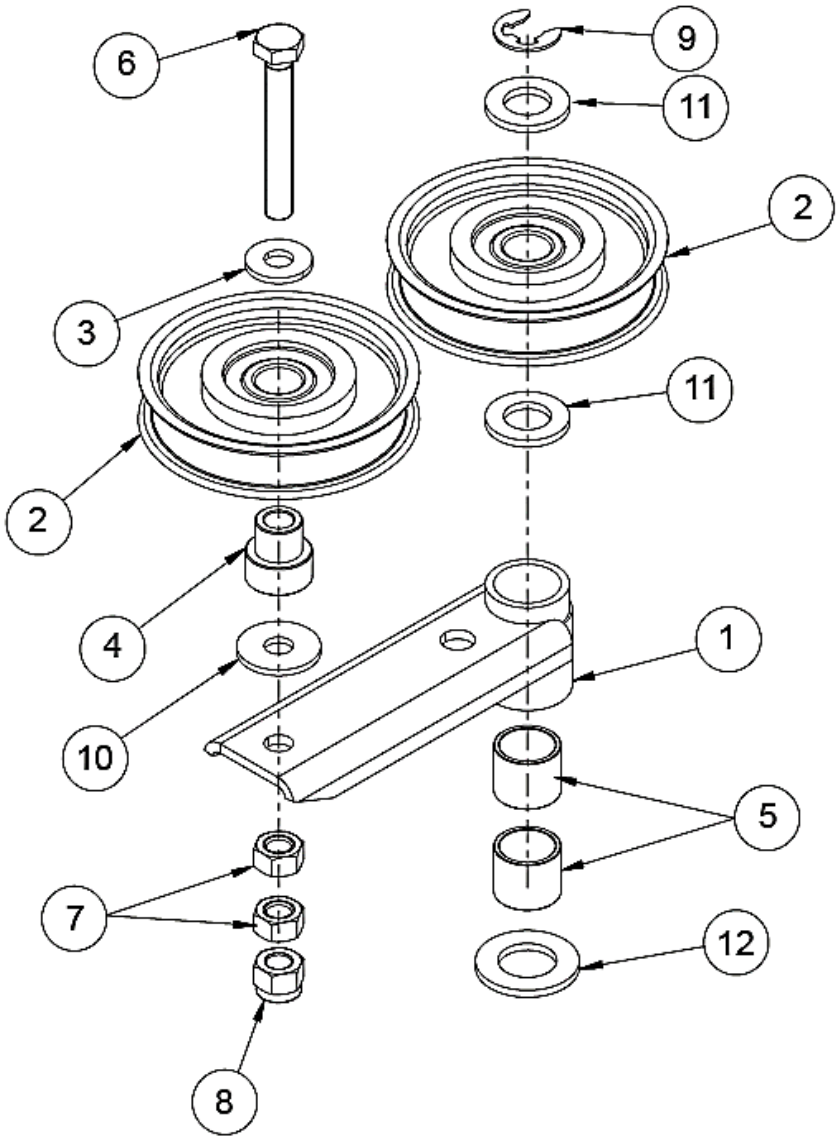

ITEM	PART NO.	DESCRIPTION
1	462201	WLD, 52 SO PUMP IDLER ARM
2	462262	ASM, IDLER 90MM
3	3302058	WASHER 10
4	5002161	BUSHING
5	B2685-202420	BEARING 20X24X20
6	B5783-1070	SCREW, HH TAP M10 X 70
7	B6170-10	NUT M10X1
8	B6182-10	NUT, NYLOC M10
9	B896-12	SNAP RING 12
10	B96-10	WASHER, FLAT LARGE M10
11	B97.1-16	WASHER 16
12	B97.1-20	WASHER 20

UPPER FRAME ASSEMBLY

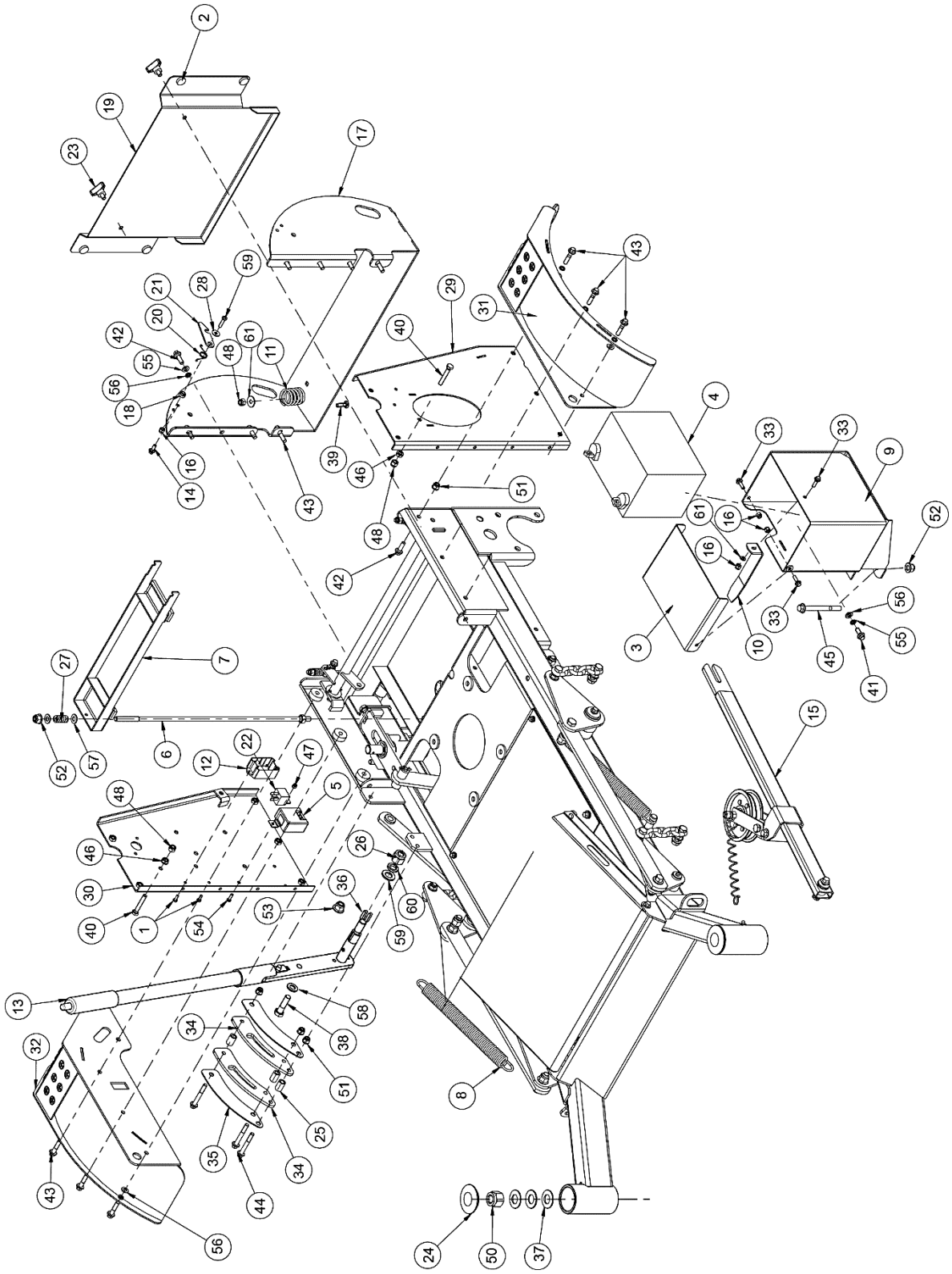

UPPER FRAME ASSEMBLY

ITEM	PART NO.	DESCRIPTION
1	103003	#10-14 X 1/2 PP PLASTITE
2	5203907	BUMPER, RUBBER
3	463746-2	CAP, BATTERY BOX
4	REFERENCE ONLY	BATTERY 12V
5	453416	MODULE, SAFETY
6	462208	WLD, TANK HOLD-DOWN
7	462261	ASM, GAS TANK BRKT
8	463521	SPRING, DECK
9	462250-2	WLD, BATTERY BOX
10	463745-2	CLAMP, BATTERY
11	5203044	SEAT SPRING
12	463782	MODULE, SOFT START
13	464187	ASM, LIFT LEVER
14	B5787-616	SCREW, HH FLANGE M6X16
15	464128	ASM, 52 SO FLOATING IDLER BAR DETAIL ON PG 23
16	B6182-6	NUT, NYLOC M6
17	462213-2	WLD, FOOT PLATE FRAME
18	463211	BUSHING, LATCH
19	463665-2	PAN, TOE PANEL
20	463212	SPRING, LATCH
21	463210-2	LATCH, FOOT PLATE
22	583351	ELECTRIC LIFT RELAY
23	3302190	KNOB, 3-PRONGED W/STUD
24	5202009	DUST CAP
25	5202022	BUSHING
26	B6182-16	NYLOC NUT M16
27	5205003	SPRING, COMPRESSION
28	B96-6	WASHER, FLAT LARGE M6
29	462209-2	WLD, LH UPPER SIDE
30	462210-2	WLD, RH UPPER SIDE
31	462211-2	WLD, LH FENDER
32	462212-2	WLD, RH FENDER
33	B5787-620	HEX FLANGE HD BOLT M6X20
34	463193-2	PLATE, LOCK
35	463194-2	COVER, LOCK PLATE
36	B1096-625	ASM, LIFT LEVER
37	B1972-A40	WASHER, SPRING DISC A40
38	B5782-1245	SCREW, HH M12 X 45
39	B801-825	BOLT, CARRIAGE SN M8X25
40	B5783-850	BOLT M8X50
41	B5787-820	SCREW, HH FLANGE M8X20
42	B5787-825	SCREW, HH FLANGE M8x25
43	B5787-835	BOLT, M8 X 35 FLANGE HEAD
44	B5787-860	SCREW, HH FLANGED M8 X 60
45	B5787-10100	SCREW, HH FLANGED M10 X 100
46	B6177-8	NUT M8

UPPER FRAME ASSEMBLY

ITEM	PART NO.	DESCRIPTION
47	B6182-5	NUT, NYLOC M5
48	B6182-8	NUT, NYLOC M8
49	B6182-12	NUT, NYLOC M12
50	B6182-20	NUT, NYLOC M20
51	B6183-8	NUT, FLANGED NYLOC M8
52	B6183-10	NUT, NYLOC FLANGE M10
53	B6183-12	NUT, NYLOC FLANGE M12
54	B823-516	SCREW M5X16
55	B93-8	LOCKWASHER 8
56	B97.1-8	WASHER 8
57	B97.1-10	WASHER, FLAT M10
58	B97.1-12	WASHER 12
59	B97.1-16	WASHER 16
60	B93-16	WASHER 16MM LOCK

LIFT LEVER ASSEMBLY

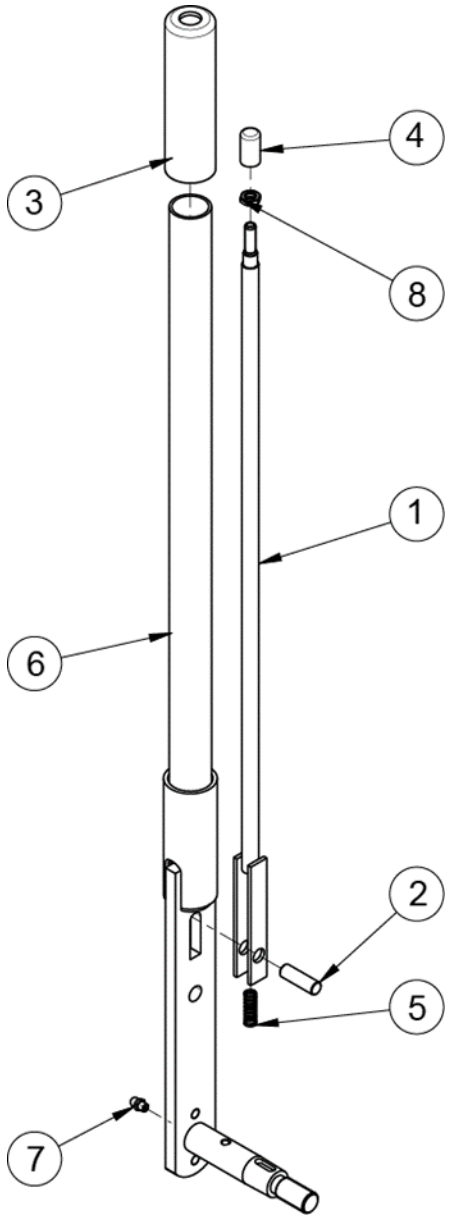

ITEM	PART NO.	DESCRIPTION
1	462128	WLD, RELEASE ROD
2	5202030	ROLLER
3	5202032	HANDLE GRIP
4	5202033	PUSH BUTTON
5	5202034	COMPRESSION SPRING
6	462281-2	WLD, DECK LIFT LEVER
7	B1152-6	GREASE FITTING M6
8	B6172-8	NUT, THIN HEX M8

FLOATING IDLER BAR

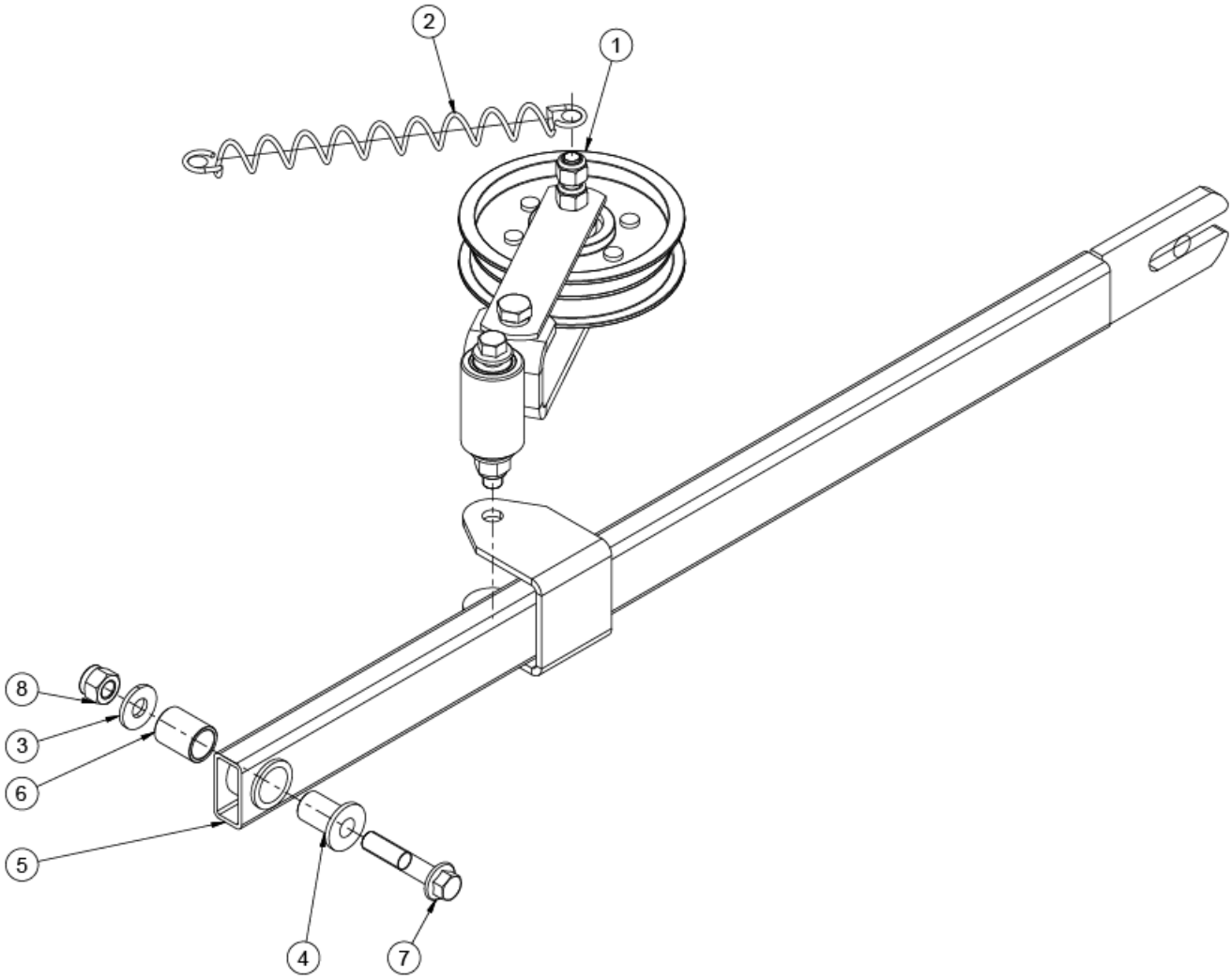

ITEM	PART NO.	DESCRIPTION
1	REFERENCE ONLY	ASM, 52 SO FLOATING IDLER DETAIL ON PG 24
2	463787	SPRING, TENSION
3	3302058	WASHER 10
4	4201801	BUSHING
5	462204-2	WLD, FLTG IDLER BAR
6	B2685-162025	OILITE BRONZE BEARING 16X20X25
7	B5787-1050	SCREW, HH FLANGED M10 X 50
8	B6182-10	NUT, NYLOC M10

FLOATING IDLER ASSEMBLY

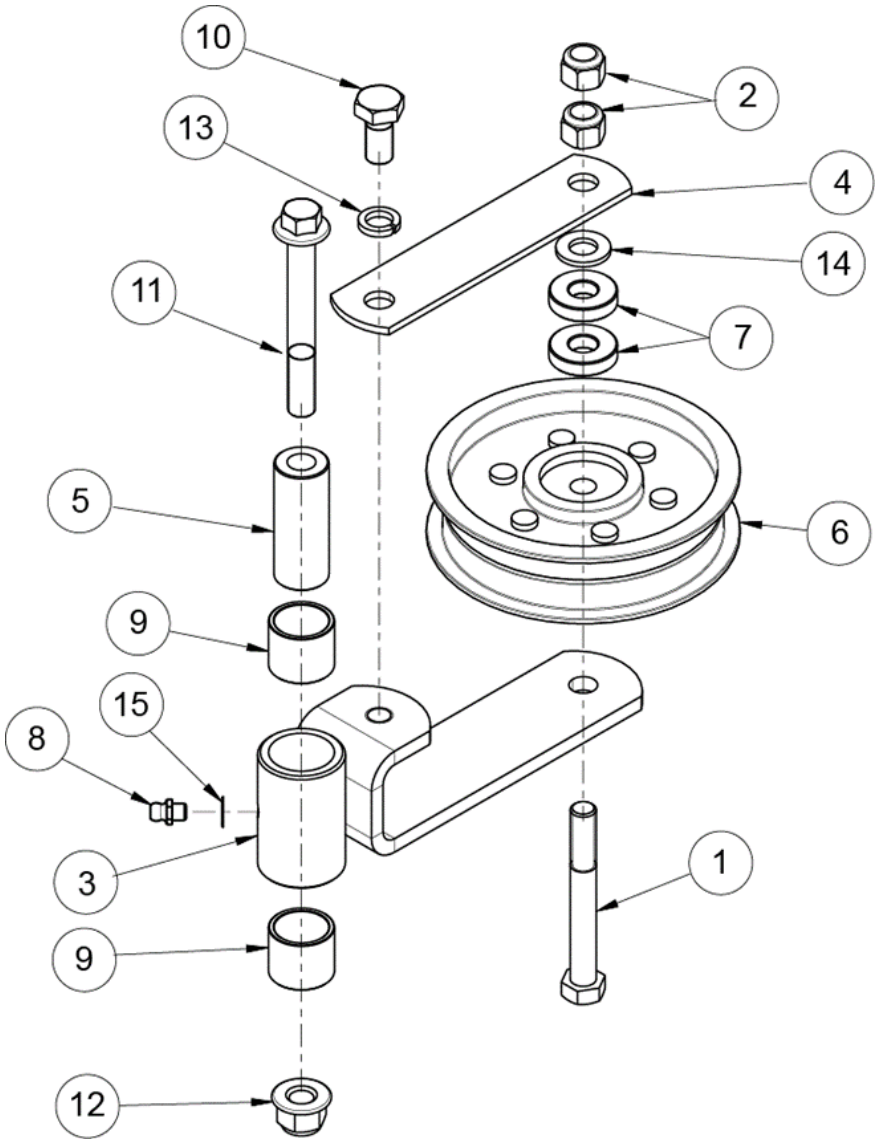

ITEM	PART NO.	DESCRIPTION
1	100030	3/8-16 X 3 HHTB
2	104257	3/8-16 HEX NYLOC NUT
3	462196	WLD, DECK TENSION ARM
4	463570	LINK, DECK TENSION
5	463638	BUSHING, DECK TENSION
6	523329	FLOATING IDLER - FLAT
7	5002164	PADDING BLOCK
8	B1152-6	GREASE FITTING M6
9	B2685-202420	BEARING 20X24X20
10	B5783-1020	SCREW, HH TAP M10 X 20
11	B5787-1080	SCREW, FLANGE HEAD M10 X 80
12	B6183-10	NUT, NYLOC FLANGE M10
13	B93-10	SPLIT LOCK WASHER M10
14	B97.1-10	WASHER, FLAT M10
15	B861.1-16	INT TOOTH LOCKWASHER 6

LEG PAD ASSEMBLY

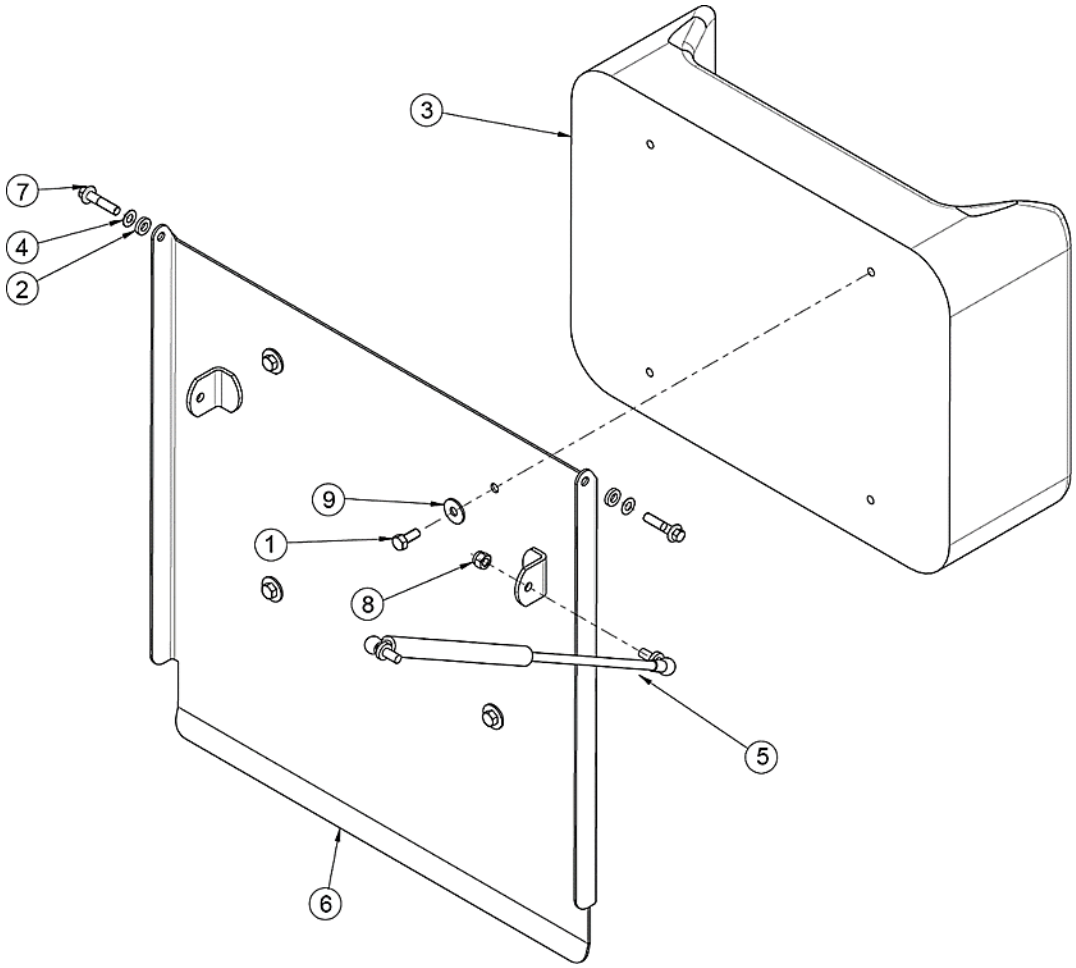

ITEM	PART NO.	DESCRIPTION
1	100271	5/16-18 X 3/4 HHCS
2	253075	CABLE ANCHOR SPACER
3	453379	CUSHION
4	463454	WASHER, .312 ID WAVEY
5	5210107	DAMPER
6	462177-1	WLD, LEG PAD PAN
7	B5787-835	BOLT, M8 X 35 FLANGE HEAD
8	B6182-8	NUT, NYLOC M8
9	B96-8	WASHER 8

FUEL TANK ASSEMBLY

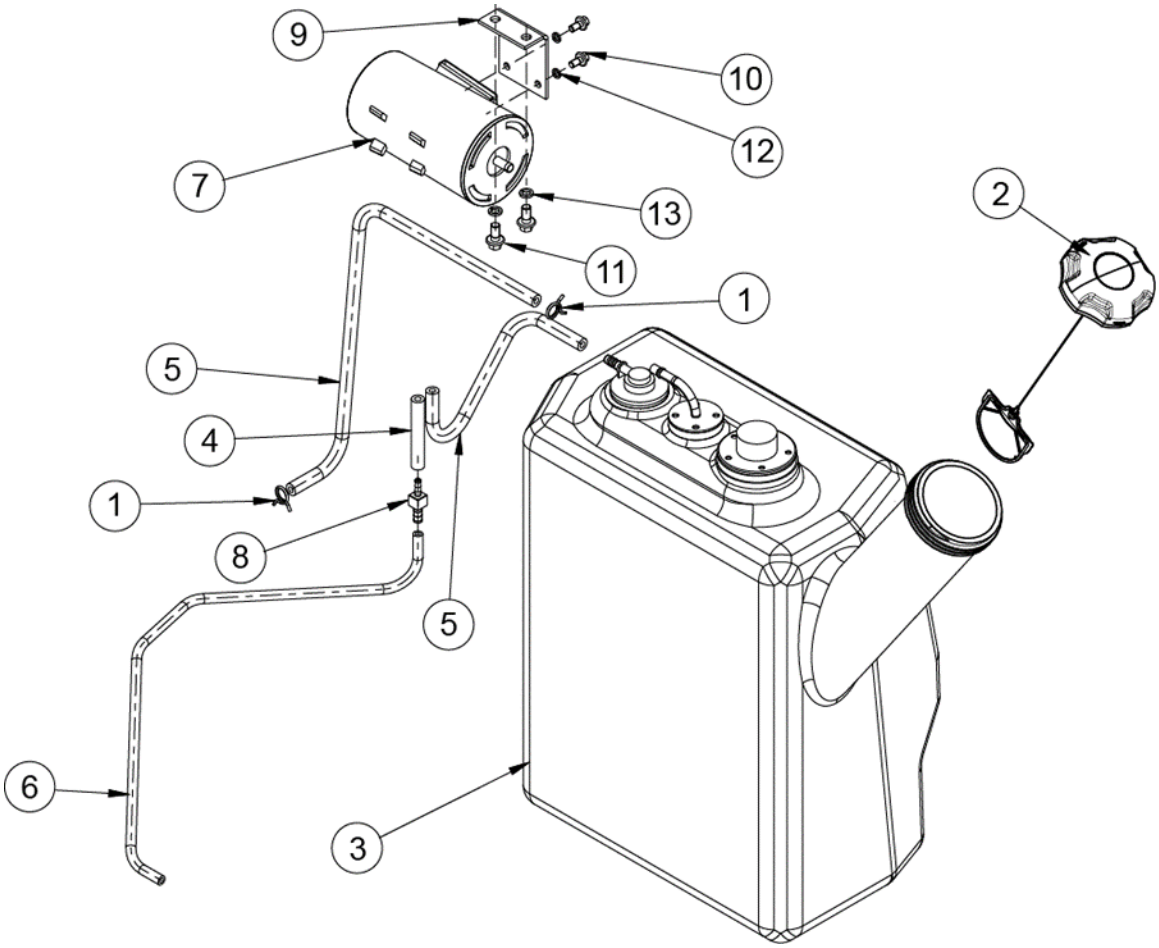

ITEM	PART NO.	DESCRIPTION
1	363098	CLAMP, FUEL LINE 1/4 ID
2	363413	FUEL CAP - EPA/CARB
3	462217	ASM, 8 GAL FUEL TANK
4	463552	HOSE, VENT 1/4 X 3"
5	463785	1/4" FUEL LINE - 14"
6	463790	3/16 FUEL LINE - 22"
7	543363	CANISTER, CARBON 680cc
8	5000130	REDUCER, HOSE 3/16 - 1/4
9	463714-2	MOUNT, CANISTER
10	B5787-612	SCREW, FLANGED HH M6 X 12
11	B5787-816	SCREW, HH FLANGE M8X16
12	B93-6	LOCKWASHER 6
13	B93-8	LOCKWASHER 8

48” DECK ASSEMBLY

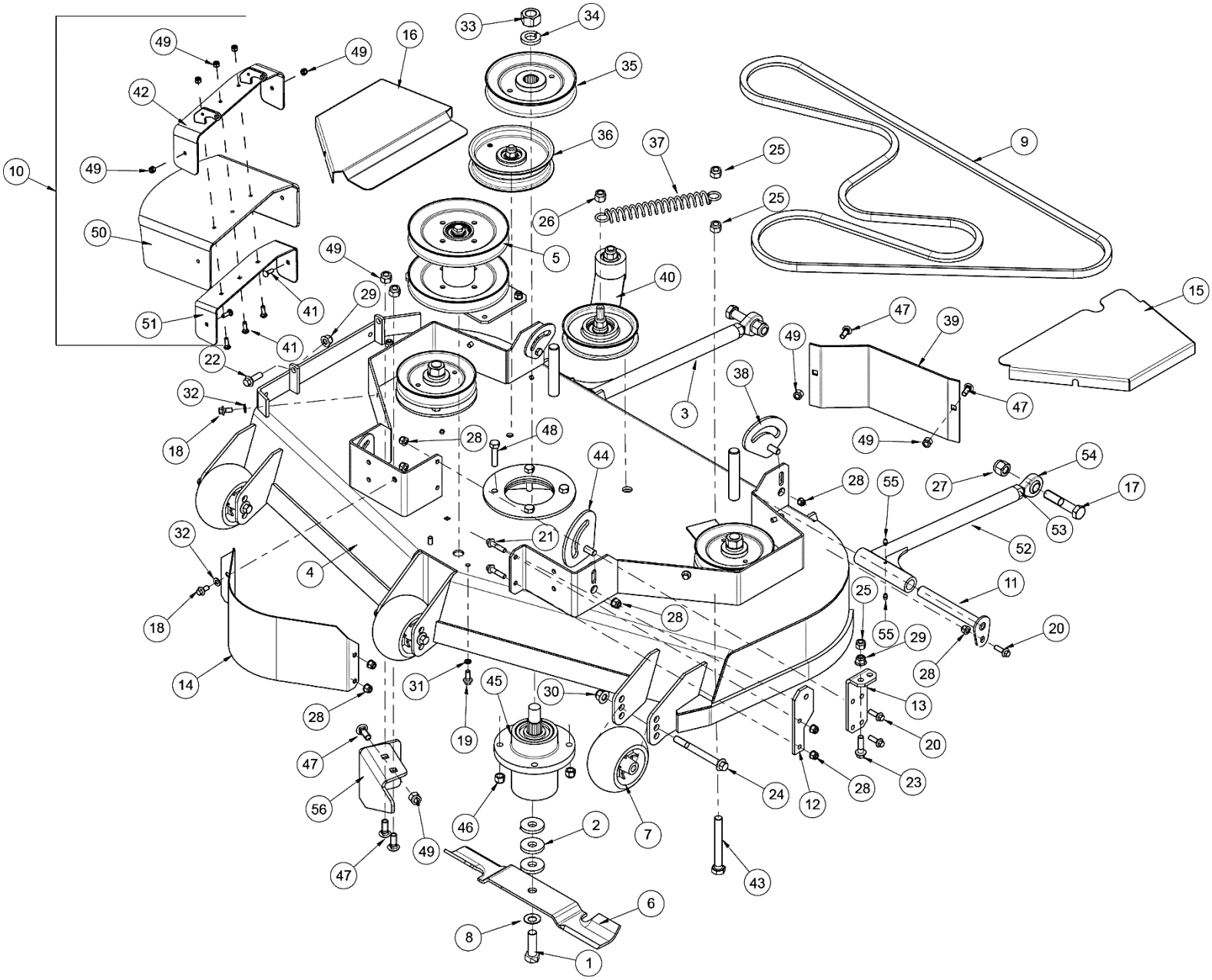

48” DECK ASSEMBLY

ITEM	PART NO.	DESCRIPTION
1	100347	5/8-11 X 2 HHCS
2	363382	BLADE SPACER
3	462264	ASM, 48 DECK STRUT
4	462275	WLD, 48 DECK W/DECALS
5	REFERENCE ONLY	ASM, DRIVE IDLER DETAIL ON PG 34
6	483103	BLADE, 16.250" OFFSET
	483049	16.25 MULCHER (WAVY)
7	543225	ROLLER, ANTI SCALP
8	583108	5/8 SPRING DISC WASHER
9	603050	BLADE BELT (R)
10	4801050	ASM, DISCHARGE CHUTE
11	5201055	AXLE PIN WELDMENT
12	463690-2	TAB, IDLER STRAP MT
13	463691-2	ANGLE, SPRING MT
14	462266	PULLEY COVER, FRONT DECK W/DECALS
15	462269	PULLEY COVER, 48 LH DECK W/DECALS
16	462270	PULLEY COVER, 48 RH DECK W/DECALS
17	B5782-1680	SCREW, HH M16 X 80
18	B5787-816	SCREW, HH FLANGE M8X16
19	B5787-820	SCREW, HH FLANGE M8X20
20	B5787-825	SCREW, HH FLANGE M8x25
21	B5787-835	BOLT, M8 X 35 FLANGE HEAD
22	B5787-1030	SCREW, HH FLANGE M10x30
23	B5787-1035	HEX FLANGE HD BOLT M10X35
24	B5787-12120	SCREW, HH FLANGE M12 X 120
25	B6182-10	NUT, NYLOC M10
26	B6182-12	NUT, NYLOC M12
27	B6182-16	NYLOC NUT M16
28	B6183-8	NUT, FLANGED NYLOC M8
29	B6183-10	NUT, NYLOC FLANGE M10
30	B6183-12	NUT, NYLOC FLANGE M12
31	B93-8	LOCKWASHER M8
32	B97.1-8	WASHER 8
33	104511	3/4-16 UNF REG HEX NUT
34	105010	3/4 LOCKWASHER
35	632061	PULLEY, 48 DECK
36	5201010	DECK PULLEY ASSEMBLY DETAIL ON PG 38
37	543520	EXTENSION SPRING
38	462147	WLD, DECK ADJUSTER
39	543212-2	BAFFLE, DOGLEG 48, RED
40	REFERENCE ONLY	ASM, IDLER PULLEY ARM DETAIL ON PG 36
41	B12-825	SQUARE BOLT M8 X 25
42	4801060	CHUTE, BRACKET WLD, INNER

48” DECK ASSEMBLY

ITEM	PART NO.	DESCRIPTION
43	B5783-1080	HEX HD BOLT M10X80
44	462235	WLD, DECK ADJUSTER MIR
45	583106	BLADE SPINDLE ASSY DETAIL ON PG 35
46	104257	3/8-16 HEX NYLOC NUT
47	B801-820	BOLT, CARRIAGE SN M8X20
48	100294	3/8-16 X 1-1/2 HHCS
49	B6182-8	NUT, NYLOC M8
50	4801052	DISCHARGE CHUTE
51	4801051	CHUTE BRACKET, INNER
52	462231-1	WLD, 48 DECK STRUT
53	B6170-16	NUT M16
54	SABJK16C	ROD END, SPHERICAL 16mm
55	B1152-6	GREASE FITTING M6
56	543212-2	BAFFLE, DOGLEG 48, RED

52” DECK ASSEMBLY

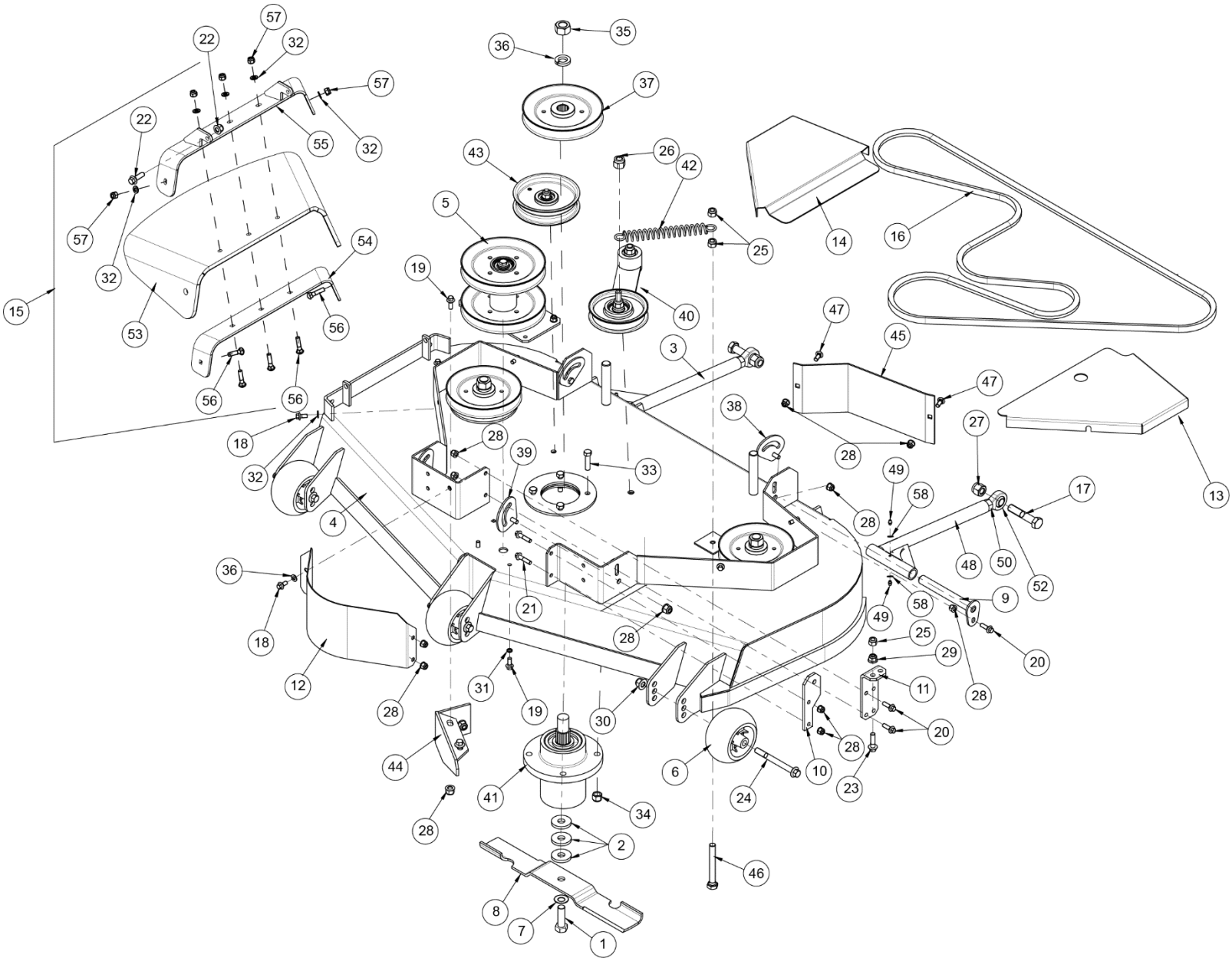

52” DECK ASSEMBLY

ITEM	PART NO.	DESCRIPTION
1	100347	5/8-11 X 2 HHCS
2	363382	BLADE SPACER
3	462265	ASM, 52 DECK STRUT
4	462276	WLD, 52 DECK W/DECALS
5	REFERENCE ONLY	ASM, DRIVE IDLER DETAIL ON PG 34
6	543225	ROLLER, ANTI SCALP
7	583108	5/8 SPRING DISC WASHER
8	823004	18" HI LIFT BLADE
	823353	18" MULCHING BLADE
9	5201055	AXLE PIN WELDMENT
10	463690-2	TAB, IDLER STRAP MT
11	463691-2	ANGLE, SPRING MT
12	462266	PULLEY COVER, FRONT DECK W/DECALS
13	462267	PULLEY COVER, 52 LH DECK W/DECALS
14	462268	PULLEY COVER, 52 RH DECK W/DECALS
15	6001050A	ASM, DISCHARGE CHUTE 52/60
16	603053X	61" DECK DRIVE BELT
17	B5782-1680	SCREW, HH M16 X 80
18	B5787-816	SCREW, HH FLANGE M8X16
19	B5787-820	SCREW, HH FLANGE M8X20
20	B5787-825	SCREW, HH FLANGE M8x25
21	B5787-835	BOLT, M8 X 35 FLANGE HEAD
22	B5787-1030	SCREW, HH FLANGE M10x30
23	B5787-1035	HEX FLANGE HD BOLT M10X35
24	B5787-12120	SCREW, HH FLANGE M12 X 120
25	B6182-10	NUT, NYLOC M10
26	B6182-12	NUT, NYLOC M12
27	B6182-16	NYLOC NUT M16
28	B6183-8	NUT, FLANGED NYLOC M8
29	B6183-10	NUT, NYLOC FLANGE M10
30	B6183-12	NUT, NYLOC FLANGE M12
31	B93-8	LOCKWASHER 8
32	B97.1-8	WASHER 8
33	100294	3/8-16 X 1-1/2 HHCS
34	104257	3/8-16 HEX NYLOC NUT
35	104511	3/4-16 UNF REG HEX NUT
36	105010	3/4 LOCKWASHER
37	452073	PULLEY, DECK
38	462147	WLD, DECK ADJUSTER
39	462235	WLD, DECK ADJUSTER MIR
40	REFERENCE ONLY	ASM, IDLER PULLEY ARM DETAIL ON PG 36
41	583106	BLADE SPINDLE ASSY DETAIL ON PG 35
42	543520	EXTENSION SPRING
43	5201010	DECK PULLEY ASSEMBLY DETAIL ON PG 38

52” DECK ASSEMBLY

ITEM	PART NO.	DESCRIPTION
44	452119-2	WLD, DISCHARGE BAFFLE, PTD
45	543046-2	BAFFLE, BIRDWING LH, PTD
46	B5783-1080	HEX HD BOLT M10X80
47	B801-820	BOLT, CARRIAGE SN M8X20
48	5201091	SUPPORT POLE
49	B1152-6	GREASE FITTING M6
50	B6170-16	NUT M16
51	B93-6	LOCKWASHER 6
52	SABJK16C	ROD END, SPHERICAL 16MM
53	6001053	DISCHARGE CHUTE (RUBBER)
54	6001052A	INNER BRACKET, DISCHARGE CHUTE
55	6001054A	OUTER BRACKET, DISCHARGE CHUTE
56	B12-835	HEX HD BOLT M8X35
57	B6182-8	NUT, NYLOC M8
58	B97.1-6	WASHER 6

60” DECK ASSEMBLY

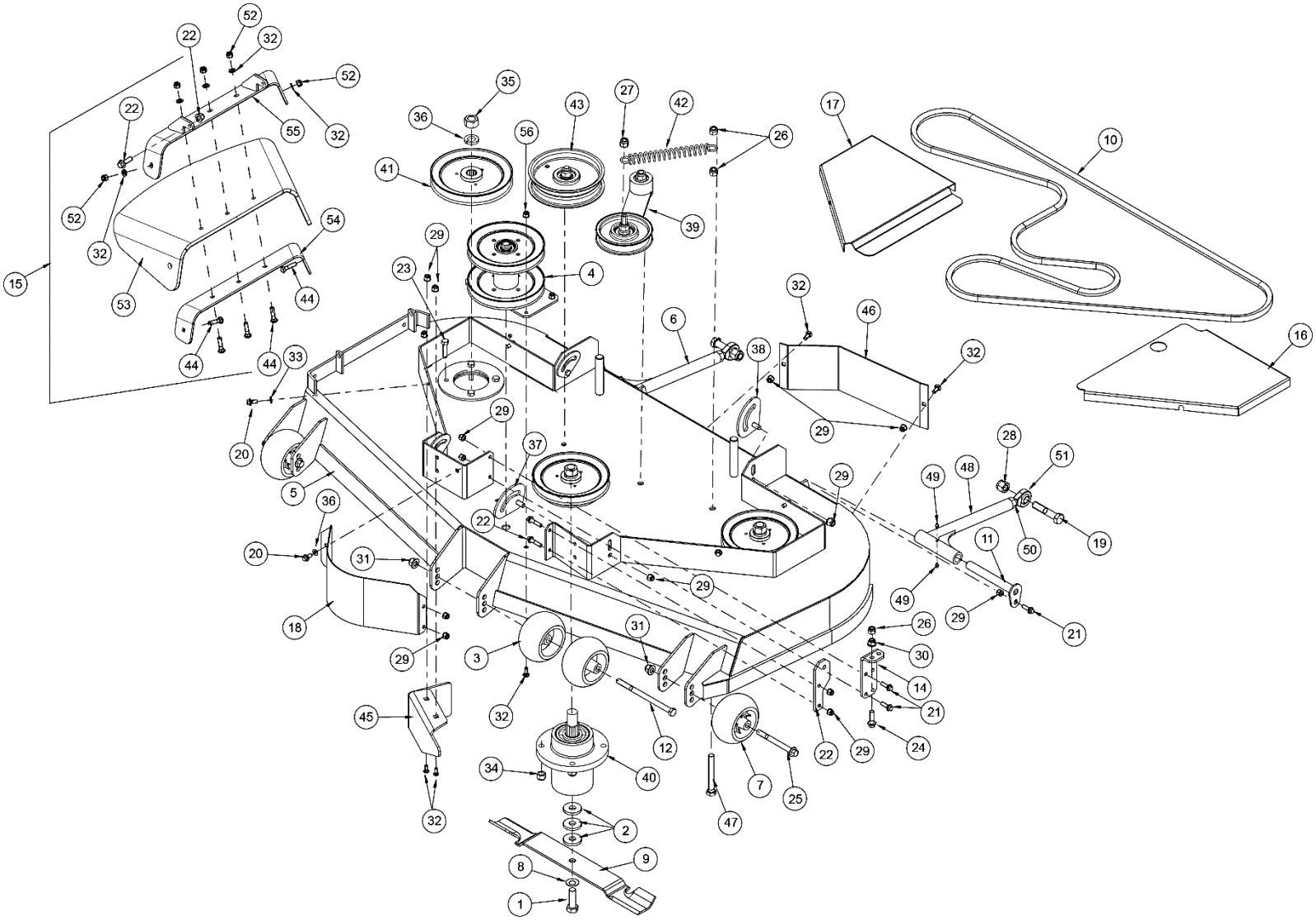

60” DECK ASSEMBLY

ITEM	PART NO.	DESCRIPTION
1	100347	5/8-11 X 2 HHCS
2	363382	BLADE SPACER
3	423023	ROLLER, ANTI SCALP
4	REFERENCE ONLY	ASM, DRIVE IDLER DETAIL ON PG 34
5	462277	WLD, 60 DECK W/DECALS
6	542025	ASM, DECK STRUT
7	543225	ROLLER, ANTI SCALP
8	583108	5/8 SPRING DISC WASHER
9	633335	BLADE, 20.5" HI LIFT
10	5001002	BELT- BLADE DRIVE
11	5201055	AXLE PIN WELDMENT
12	5202029	SCREW, HH CAP M12 X 185
13	463690-2	TAB, IDLER STRAP MT
14	463691-2	ANGLE, SPRING MT
15	6001050A	ASM, DISCHARGE CHUTE 52/60
16	462271	PULLEY COVER 60 LH DECK W/DECALS
17	462272	PULLEY COVER, 60 RH DECK W/DECALS
18	462266	PULLEY COVER, FRONT DECK W/DECALS
19	B5782-1680	SCREW, HH M16 X 80
20	B5787-816	SCREW, HH FLANGE M8X16
21	B5787-825	SCREW, HH FLANGE M8X25
22	B5787-835	BOLT, M8 X 35 FLANGE HEAD
23	100294	3/8-16 X 1-1/2 HHCS
24	B5787-1035	HEX FLANGE HD BOLT M10X35
25	B5787-12120	SCREW, HH FLANGE M12 X 120
26	B6182-10	NUT, NYLOC M10
27	B6182-12	NUT, NYLOC M12
28	B6182-16	NYLOC NUT M16
29	B6183-8	NUT, FLANGED NYLOC M8
30	B6183-10	NUT, NYLOC FLANGE M10
31	B6183-12	NUT, NYLOC FLANGE M12
32	B801-820	BOLT, CARRIAGE SN M8X20
33	B97.1-8	WASHER 8
34	104257	3/8-16 HEX NYLOC NUT
35	104511	3/4-16 UNF REG HEX NUT
36	105010	3/4 LOCKWASHER
37	462147	WLD, DECK ADJUSTER
38	462235	WLD, DECK ADJUSTER MIR
39	REFERENCE ONLY	ASM, IDLER PULLEY ARM DETAIL ON PG 38
40	583106	BLADE SPINDLE ASSY DETAIL ON PG 35
41	632044	PULLEY, 60 DB DECK
42	543520	EXTENSION SPRING
43	5201010	DECK PULLEY ASSEMBLY DETAIL ON PG 38

60” DECK ASSEMBLY

ITEM	PART NO.	DESCRIPTION
44	B12-835	HEX HD BOLT M8X35
45	543214-2	BAFFLE, DOGLEG 60, RED
46	543217-2	BAFFLE, BIRDWING 60, RED
47	B5783-1080	HEX HD BOLT M10X80
48	542024-1	WLD, STRUT, BLACK
49	B1152-6	GREASE FITTING M6
50	B6170-16	NUT M16
51	SABJK16C	ROD END, SPHERICAL 16MM
52	B6182-8	NUT, NYLOC M8
53	6001053	DISCHARGE CHUTE (RUBBER)
54	6001052A	INNER BRACKET, DISCHARGE CHUTE
55	6001054A	OUTER BRACKET, DISCHARGE CHUTE
56	B6182-8	NUT, NYLOC M8

DRIVE IDLER ASSEMBLY

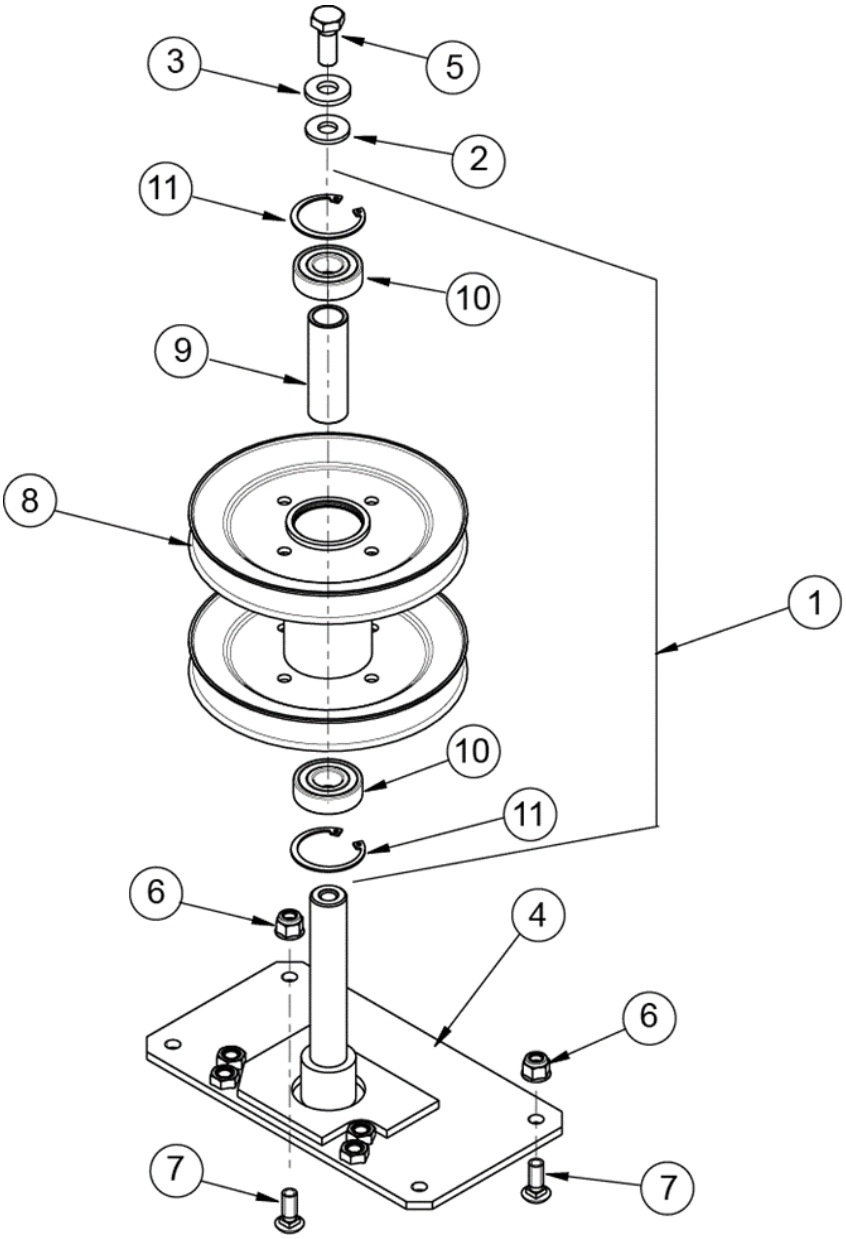

ITEM	PART NO.	DESCRIPTION
1	462263	ASM, DRIVE IDLER PULLEY
2	3302058	WASHER 10
3	5201061	WASHER
4	462233-1	WLD, DRIVE IDLER AXLE
5	B5783-1025	SCREW, HH TAP M10x25
6	B6182-8	NUT, NYLOC M8
7	B801-820	BOLT, CARRIAGE SN M8X20
8	462234	WLD, DRIVE IDLER 7.5"
9	463683	SPACER, DRIVE IDLER
10	B276-6204RS	BEARING
11	B893.2-47	SNAP RING 47

BLADE SPINDLE ASSEMBLY

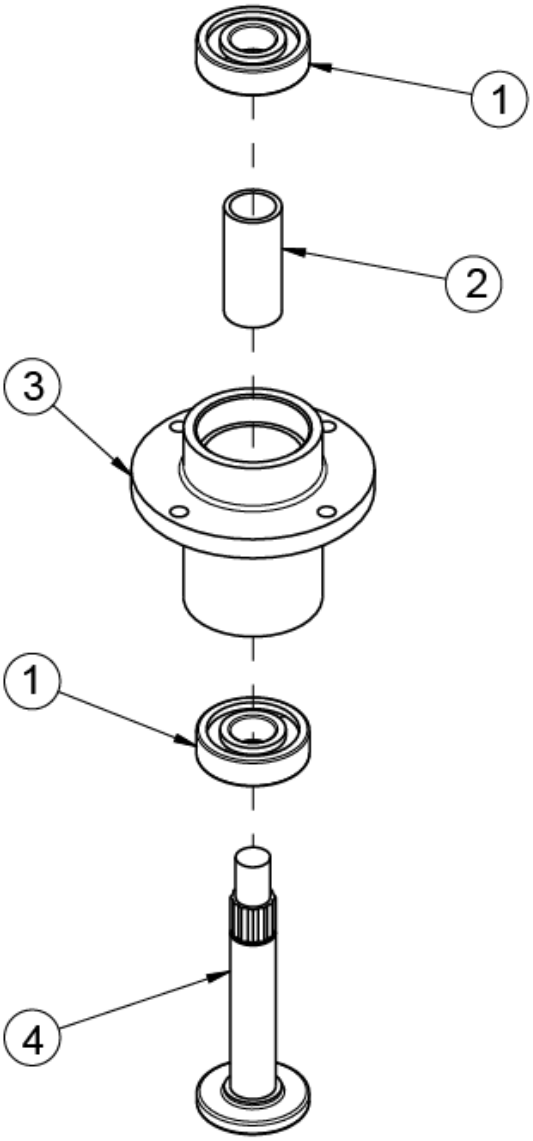

ITEM	PART NO.	DESCRIPTION
1	363350	BEARING – BLADE SPINDLE
2	583113	BEARING SPACER TUBE
3	583111	SPINDLE HOUSING
4	583112	SPINDLE SHAFT

IDLER PULLEY ARM ASSEMBLY

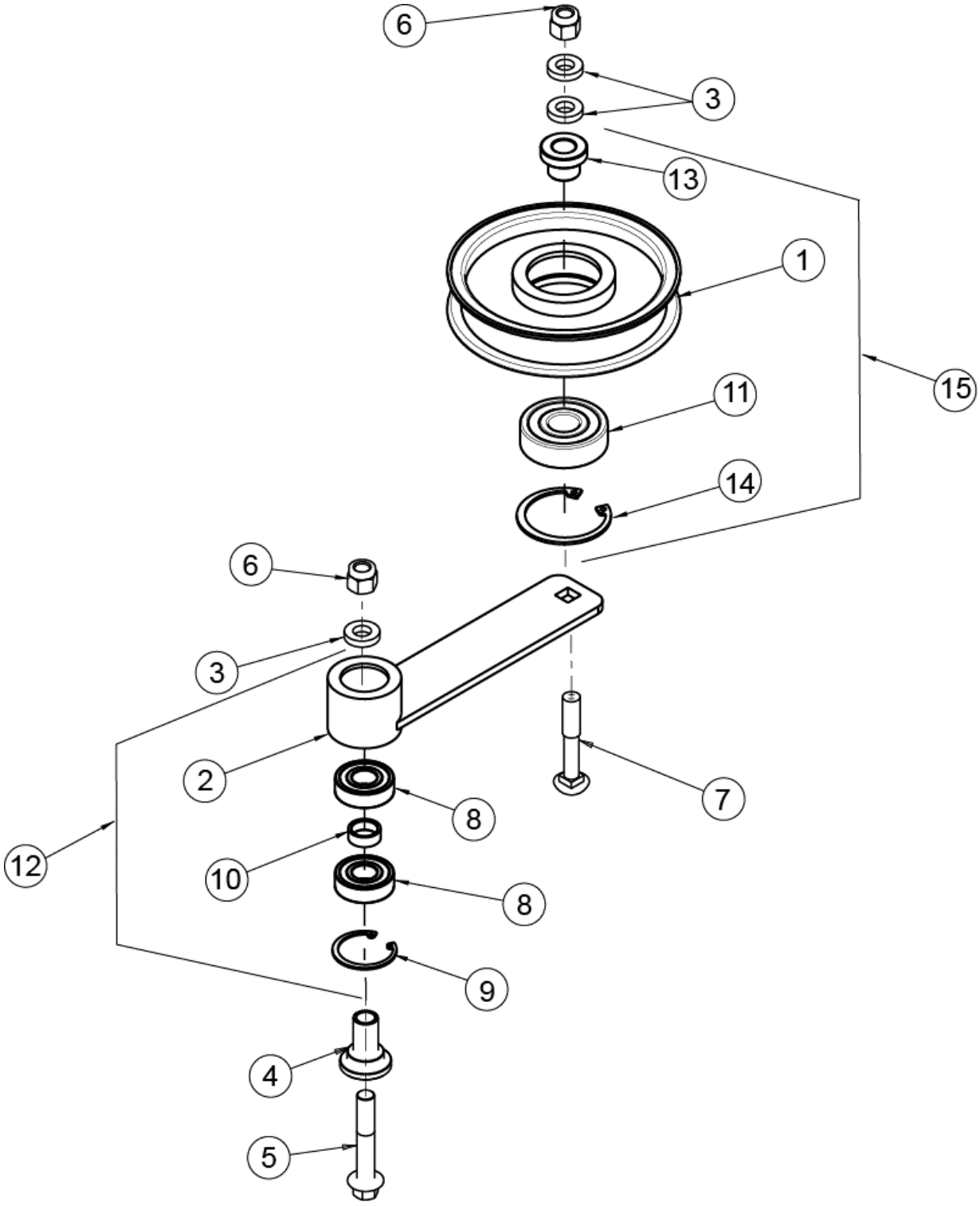

IDLER PULLEY ARM ASSEMBLY

ITEM	PART NO.	DESCRIPTION
1	3302056	IDLER PULLEY
2	452063	WLD, IDLER ARM
3	453220	SPACER
4	453313	BUSHING, STEPPED
5	B5787-1270	SCREW, HH FLANGED MM12 X 70
6	B6182-12	NUT, NYLOC M12
7	B801-1270	CARRIAGE BOLT M12X70
8	B276-6203RS	BEARING 6203-2RS
9	B893.1-40	SNAP RING 40
10	5201077	BUSHING
11	B276-6303RS	BEARING 6303-2RS
12	452071	ARM, IDLER W/BEARINGS
13	543167	SPACER, STEPPED
14	B893.2-47	SNAP RING 47
15	452062	ASM, IDLER PULLEY

DECK PULLEY ASSEMBLY

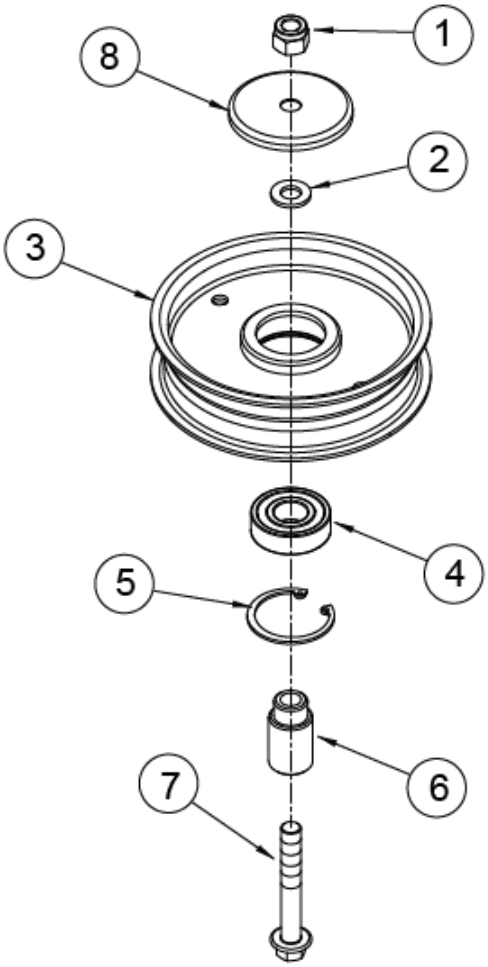

ITEM	PART NO.	DESCRIPTION
1	B6182-10	NUT, NYLOC M10
2	5201078	SPACER
3	5201012	IDLER PULLEY
4	B276-6203RS	BEARING 6203-2RS
5	B893.1-40	SNAP RING 40
6	5201011	BUSHING
7	B5787-1070	HEX FLANGE HD BOLT M10X70
8	5201291	COVER

PARK BRAKE ASSEMBLY

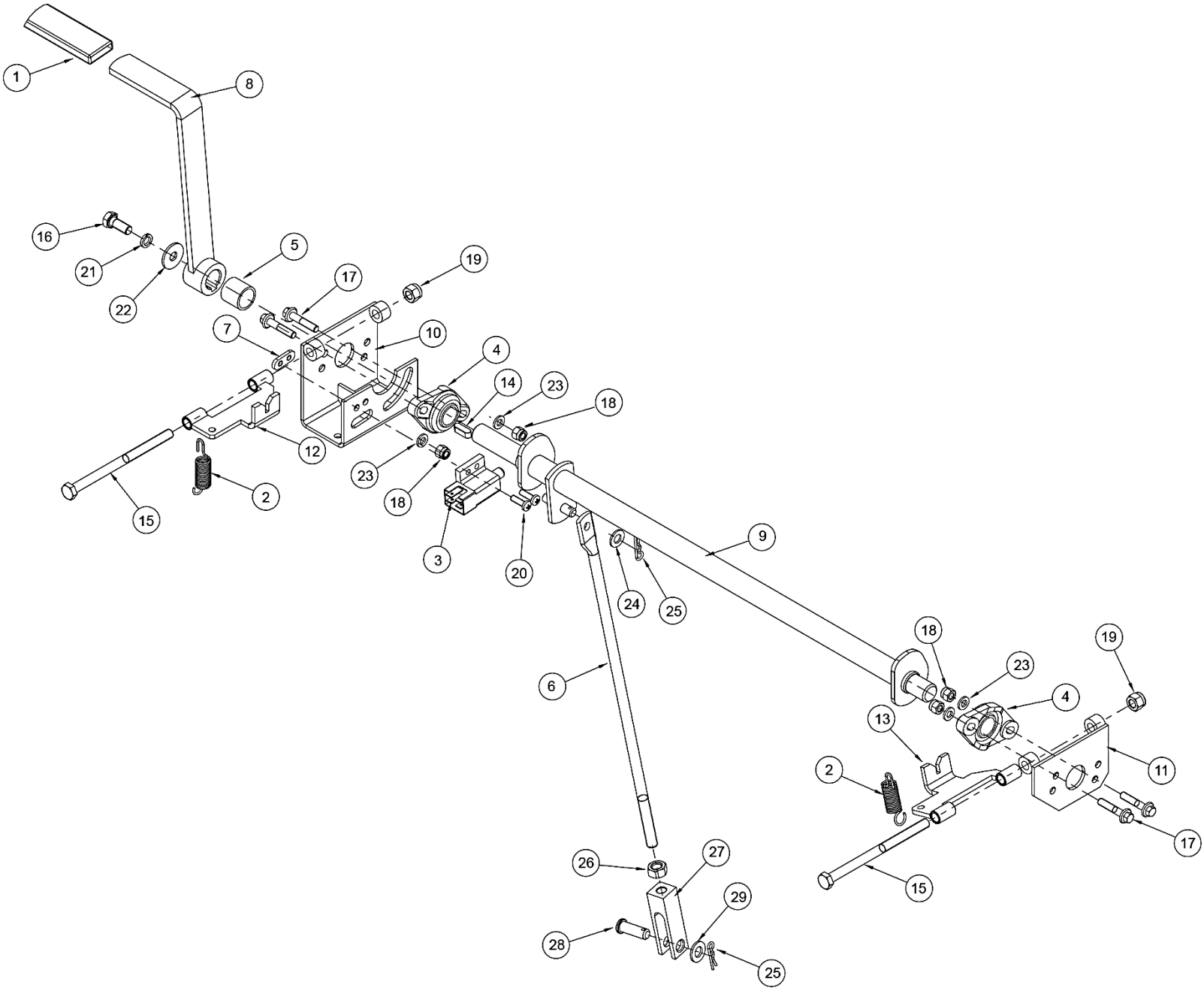

PARK BRAKE ASSEMBLY

ITEM	PART NO.	DESCRIPTION
1	363022	ADJ. LEVER GRIP
2	363155	OPC SPRING
3	463513	SWITCH, NO/NO PARK
4	463535	BEARING, TWO BOLT 17MM
5	463536	SPACER, BRAKE LEVER
6	463676	ROD, 52 SO BRAKE
7	5208103	NUT RACK
8	462159-1	WLD, 36 SO PRK BRK LEVER
9	462171-1	WLD, BRAKE LOCK SHAFT
10	462222-1	WLD, RH BRAKE LEVER BRKT
11	462223-1	WLD, LH BRAKE LEVER BRKT
12	462224-1	WLD, NEUTRAL LOCK PAWL RH
13	462225-1	WLD, NEUTRAL LOCK PAWL LH
14	B1096-618	SQUARE KEY 6X18
15	B5782-8120	BOLT M8X120
16	B5783-820	SCREW, HH TAP M8X20
17	B5787-625	M6 X 25 HH FLAT SCREW
18	B6182-6	NUT, NYLOC M6
19	B6182-8	NUT, NYLOC M8
20	B823-516	SCREW M5X16
21	B93-8	LOCKWASHER 8
22	B96-8	WASHER 8
23	B97.1-6	WASHER 6
24	B97.1-8	WASHER 8
25	XSZ56-1-17	HAIR PIN
26	B6171-10	NUT M10X1
27	5206003	CONNECTING YOKE
28	B882-1030	PIN SHAFT B10X30
29	B97.1-10	WASHER, FLAT M10

ENGINE GROUP

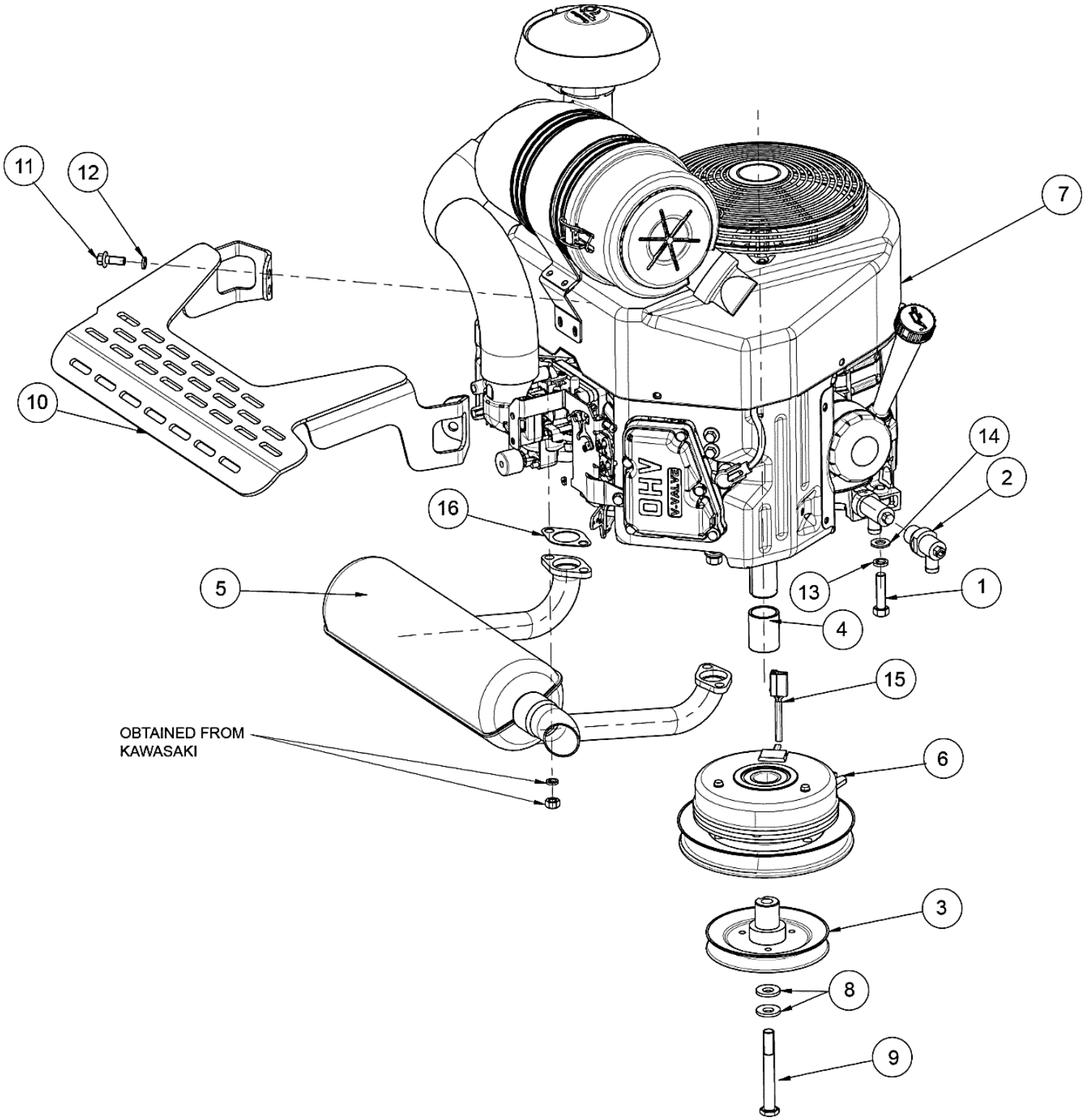

ENGINE GROUP

ITEM	PART NO.	DESCRIPTION
1	100294	3/8-16 X 1-1/2 HHCS
2	343146	90 DEGREE DRAIN -KAW BLK
3	462151	WLD, PUMP DRIVE PULLEY
4	463816	SPACER, 52 SO CLUTCH
5	463688	MUFFLER - FX730V KAW
6	463803	CLUTCH, 5218-201
7	REFERENCE ONLY	ENGINE, KAW FX730V
8	423069	SPRING DISC. WASHER - 7/16
9	2807016B	BOLT 7/16-20UNFX3-1/2
10	462226-1	WLD, MUFFLER COVER
11	B5787-820	SCREW, HH FLANGE M8X20
12	B93-8	LOCKWASHER 8
13	B93-10	SPLIT LOCK WASHER M10
14	B97.1-10	WASHER, FLAT M10
15	603083	CLUTCH ADAPT. HARNESS
16	483098	MUFFLER GASKET - 15,17 HP KAW
NOT SHOWN	463699	HARNESS, WIRE

DRIVE ASSEMBLY

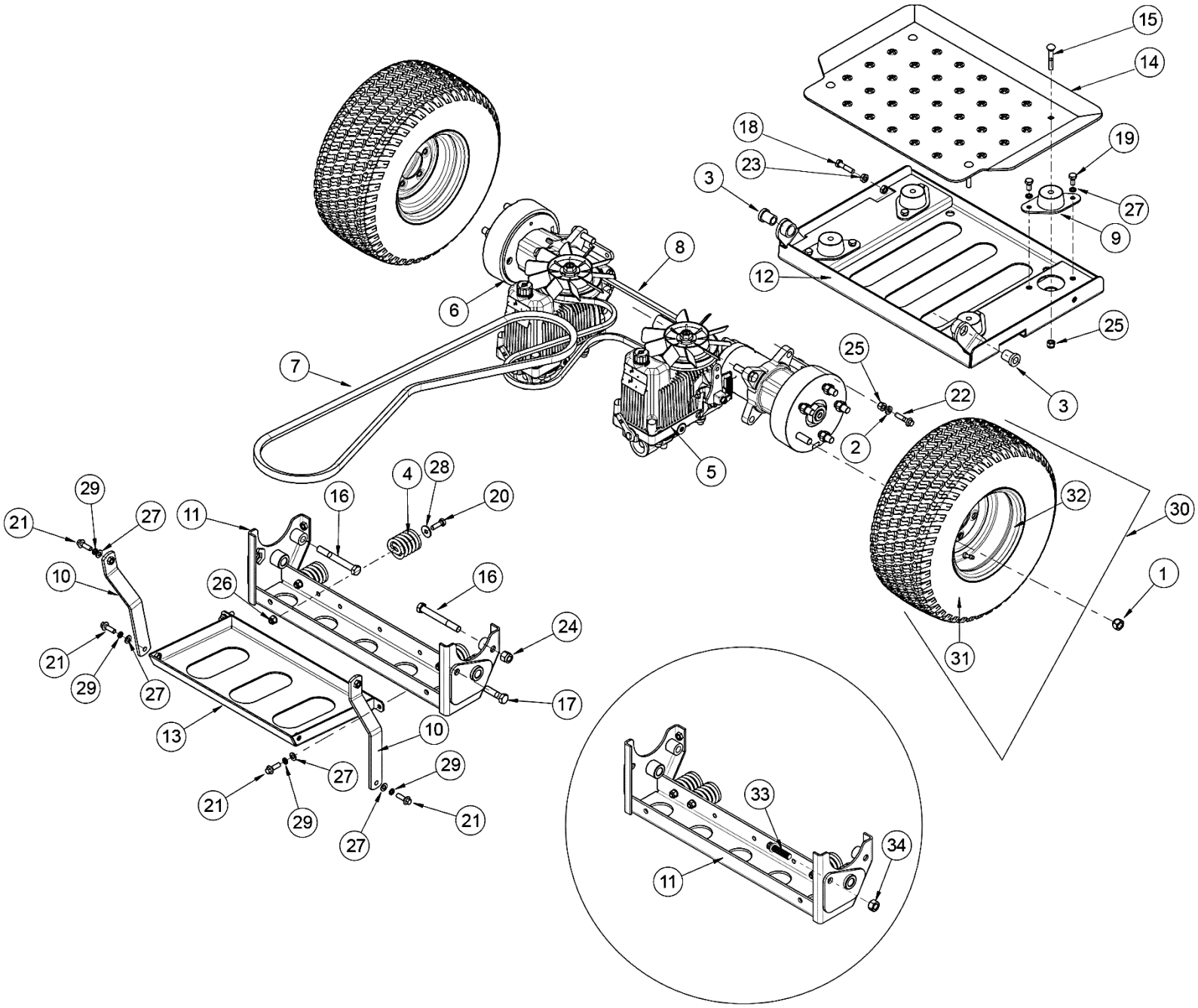

DRIVE ASSEMBLY

ITEM	PART NO.	DESCRIPTION
1	103023	1/2-20 X 60 T LUG NUT
2	253075	CABLE ANCHOR SPACER
3	463209	BUSHING, FOOT PLATE
4	463524	SPRING, COMPRESSED
5	463642	HTJ TRANSAXLE LH
6	463643	HTJ TRANSAXLE RH
7	463668	BELT, 52 SO DECK DRIVE
8	523348	PUMP DRIVE BELT
9	543181	ISO- MOUNT, SEAT
10	462136-1	WLD, AXLE PAN STRAP
11	462207-1	WLD, LOWER AXLE MOUNT
12	462214-2	WLD, FOOT PLATE
13	462215-1	WLD, AXLE PAN
14	463661-2	PAN, FOOT ISO
15	B12-850	BOLT, M8 X 50
16	B5782-12100	SCREW, HH M12 X 100
17	B5782-1245	SCREW, HH M12 X 45
18	B5782-835	BOLT M8X35
19	B5783-816	SCREW, HH TAP M8X16
20	B5783-825	HEX HD BOLT M8X25
21	B5787-825	SCREW, HH FLANGE M8X25
22	B5787-835	BOLT, M8 X 35 FLANGE HEAD
23	B6177-8	NUT, SERRATED FLANGE M8
24	B6182-12	NUT, NYLOC M12
25	B6182-8	NUT, NYLOC M8
26	B6183-8	NUT, FLANGED NYLOC M8
27	B93-8	WASHER 8MM LOCK
28	B96-8	WASHER, FLAT M8
29	B97.1-8	WASHER 8MM FLAT
30	462257	ASM, 48 SO DRIVE WHEEL BLK
	462205	ASM, 52 SO DRIVE WHEEL WHT
31	463783	TIRE, 22 X 10.00 - 10 DRIVE - 48” MODEL
	463639	TIRE, 22 X 11.00 - 10 DRIVE – 52” & 60” MODELS
32	463784	RIM FIVE HOLES, BLK 10 X 7 – 48” MODEL
	463640	RIM FIVE HOLES, BLK 10 X 8.5 - 52” & 60” MODELS
33	103034	BOLT, 1/2 - 13 X 1.75 FERRY HD
34	104259	1/2-13 HEX NYLOC NUT

WIRE HARNESS

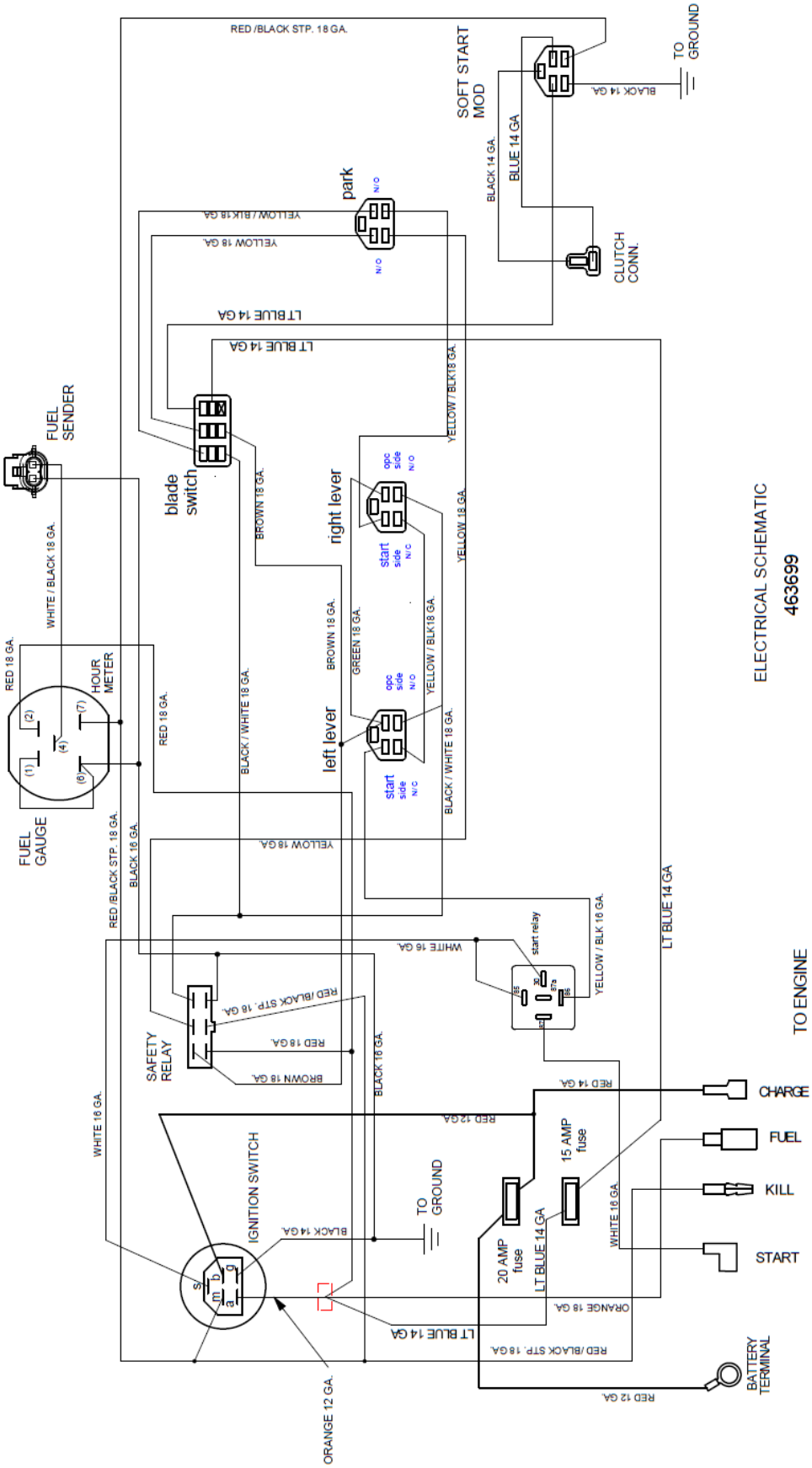

DECAL GROUP

363023

453390

453389

8304

8303

543397

8307

543380

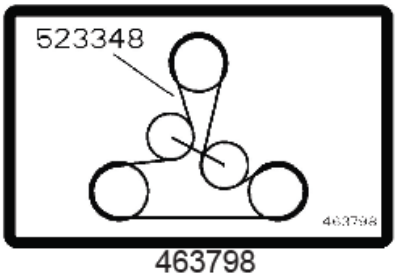

463798

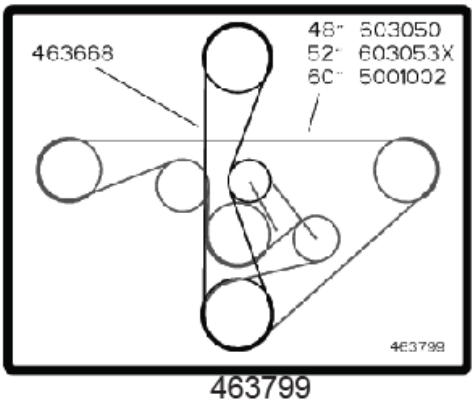

463799

8318

8008

463576

543392

DECAL GROUP

463443

8328

8326

8327

463801

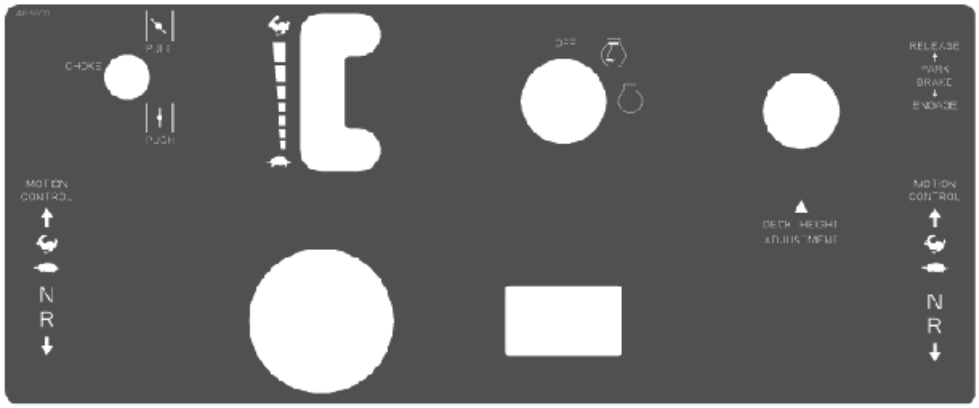

463800

WORLDLAWN

463445

WORLDLAWN

633275

WORLDLAWN®
POWER EQUIPMENT

ALL RIGHTS RESERVED

WYS48FX730VL WYS52FX730V PARTS MANUAL

CONTENTS SUBJECT TO CHANGE

STANDON 202303