F42K20

PARTS MANUAL

FOR SERIAL NUMBER 61912 AND HIGHER

Table of Contents

General Information
Encore Warranty Information A-1
Fuzion Kawasaki Quick Reference Sheet A-2
Service Locator Chart A-3
Deck Components B-1
Deck Lift Components C-1
Frame Components D-1
Drive Components E-1
Control Components
Right Hand Control Parts F-1
Left Hand Control Parts F-3
Brake Components
Right Hand Side G-1
Left Hand Side G-3
Hydro Components H-1
Fuel Components I-1
Wire Harness Schematic
F42K20 Wire Harness Schematic J-1
Decal List K-1
Notes L-1

⚠ WARNING:

THE ENGINE EXHAUST FROM THIS PRODUCT CONTAINS CHEMICALS KNOWN IN THE STATE OF CALIFORNIA TO CAUSE CANCER, BIRTH DEFECTS OR OTHER REPRODUCTIVE HARMS.

IMPORTANT:

A separate Engine Owner's Manual is included with your owner's packet which contains additional engine information that will not be repeated in this manual. You are urged to read it before attempting any operation or repair of the engine. Engine Owner's Manual covers the engine manufactures warranty.

A Division of Worldlawn Power Equipment, Inc.

Fuzion Series Mower

Limited Warranty:

Encore Manufacturing, a Division of Worldlawn Power Equipment, Inc, ("Encore") warrants that the Fuzion Series mower ("Mower"), purchased from an Authorized Encore Dealer, will be free from defects in material and workmanship for a period of three years residential from the original date of purchase (see details below). Encore also warrants the Mower's deck shell will be free from defects in material and workmanship for a period of ten years commercial/residential from the original date of purchase (see details below). During the limited warranty period, Encore will repair or replace, at its discretion, any Mower or part thereof which is found to be defective in material and workmanship. This limited warranty specifically excludes wear items, included but not limited to belts, blades, and tires. This limited warranty also specifically excludes parts covered by another manufacturer's warranty, which parts are covered only by that manufacturer's warranty.

This limited warranty extends only to the original retail purchaser ("Owner") of a Mower. This limited warranty may not be assigned or transferred without prior express written consent of Encore Manufacturing, a Division of Worldlawn Power Equipment, Inc. This limited warranty extends only to those Mowers purchased for private residential use. A Mower purchased for any other reason, for example as a commercial or rental unit, shall have a (90) day limited warranty under the same terms and conditions as set forth herein.

Proof of purchase will be required to substantiate all warranty claims. All warranty work must be performed by an Authorized Encore Dealer. Any work done on or to the Mower by anyone other than an Authorized Encore Dealer, including the original purchaser, voids all provisions of the warranty except those provisions which limit Encore's liability (as set forth below).

Any Mower or part thereof which, in Encore's sole discretion, is deemed defective shall be repaired or replaced, at Encore's option, without charge for parts or labor up to three years of the original date of purchase. Any Mower deck shell or part thereof which, in Encore's sole discretion, is deemed defective shall be repaired or replaced, at Encore's option, without charge for parts or labor for the first five years of the original date of purchase, and without charge for parts only for years six through ten from the original date of purchase. To take advantage of this limited warranty, the Mower must be returned to an Authorized Encore Dealer within the warranty period. **The cost of delivering the Mower to the Authorized Dealer and return delivery shall be the responsibility of the Owner.**

Encore's sole responsibility with any claim made under this warranty is limited only to repairing or replacing the Mower or a defective part thereof, and no claim of breach of warranty shall be cause for rescission, cancellation, or voiding the contract of sale of the Mower.

This limited warranty does not extend to any Mower or part thereof which has been misused, neglected, damaged, abused, not properly installed or maintained, altered or which has been operated in any way contrary to the operating instructions as specified in the Owner/Operator Manual. This limited warranty does not extend to any repair or replacement made necessary by normal use. **This limited warranty does not extend to the engine which is warranted separately by the engine manufacturer.**

THE WARRANTY EXPRESSED HEREIN IS IN LIEU OF OTHER WARRANTIES, EXPRESSED OR IMPLIED, INCLUDING, WITHOUT LIMITATION, ANY IMPLIED WARRANTY OR MERCHANTIBILITY OR FITNESS FOR A PARTICULAR USE, AND IS IN LIEU OF ANY AND ALL OTHER OBLIGATIONS OR LIABILITY ON WORLDLAWN'S PART.

UNDER ANY AND ALL CIRCUMSTANCES, ENCORE'S TOTAL LIABILITY TO OWNER FOR ANY AND ALL CLAIMS, LOSSES OR DAMAGES, INCLUDING LOSS OF PROFITS, ARISING OUT OF ANY CAUSE WHATSOEVER, WHETHER BASED IN CONTRACT, NEGLIGENCE OR OTHER TORT, STRICTLIABILITY, BREACH OF WARRANTY OR OTHERWISE, SHALL IN NO EVENT EXCEED THE PURCHASE PRICE OF THE MOWER. IN NO EVENT SHALL BE RESPONSIBLE FOR SPECIAL, INCIDENTAL, CONSEQUENTIAL OR EXEMPLARY DAMAGES.

Quick Reference Sheet

Engine
Kawasaki electric FS600V - S00

Blades

483035	16" blade
483049	16" mulch blade
483050	16" super hi-lift blade

Belts

353114	blade drive belt
353112	pump drive belt

Tires

353126	wheel/tire assy
353148	drive tire (18x9.5x8)
353149	rim w/ valvestem
363311	front caster complete
363260	front tire & tube (4.10/3.50-4)
* * * *	front rim not serviced

Spindles

583106	spindle assy comp.
583111	housing
363350	bearing
583112	shaft
583113	brg. Spacer tube

Transmission

353127	RH EZT transaxle (Hydro-Gear Model # ZC-BPBB-XYLB-1NPA)
353128	LH EZT transaxle (Hydro-Gear Model # ZC- DPBB- XYLC-1 NPA)

*** lifetime lubricated transaxles

Throttle	593043
Choke	593044
Muffler	353193
Wire Harnes s	353132
Pigtail Harness	353180
Clutch	423285 - Kawasaki

Electrical Components

423027	Ignition Switch
422150	Starter Relay
583423	Time Delay Module
583351	Relay
523034	Park Brake Switch
593041	Neutral Switch
523031	PTO Switch
353048	Seat Switch
523283	Hour Meter

Torque Specs

65 ft-lbs	blade bolt
90 ft-lbs	nut on top of spindle
50 ft-lbs	clutch bolt

Pulleys

423262	spindle pulley
523329	stationary idler pulleys
533114	tensioner pulley-blade drive belt
823351	pump tensioner pulley
353101	pump drive pulley

Front Caster Bearings

423200	bearing
423201	bearing retainer

Seat

353249	seat, Fuzion, no armrest
593097	molded arm rest
353219	arm rest kit

SERVICE LOCATOR CHART

1. Front Caster Wheel Bearings (2)
2. Front Caster Pivot Bearing Zerks (2)
3. Engine Oil Fill & Dipstick
4. Hour Meter
5. Engine Air Filter
6. Engine Oil Filter
7. Fuel Tank
8. Engine Fuel Filter
9. Fuel Shut-off Valve
10. Fuel Tank w/ Cup Holder
11. Hydraulic Bypass
12. Engine Vent Screen
13. Drive Tires
14. Pump Belt (353112)
15. Blade Drive Belt (353114)
16. Front Casters Wheels
17. 14” Blade (423029)
18. Located inside the seat frame under operators seat:
    1. Time delay module
    2. Relays
    3. Fuse Block
    4. Start Relay
    5. Battery

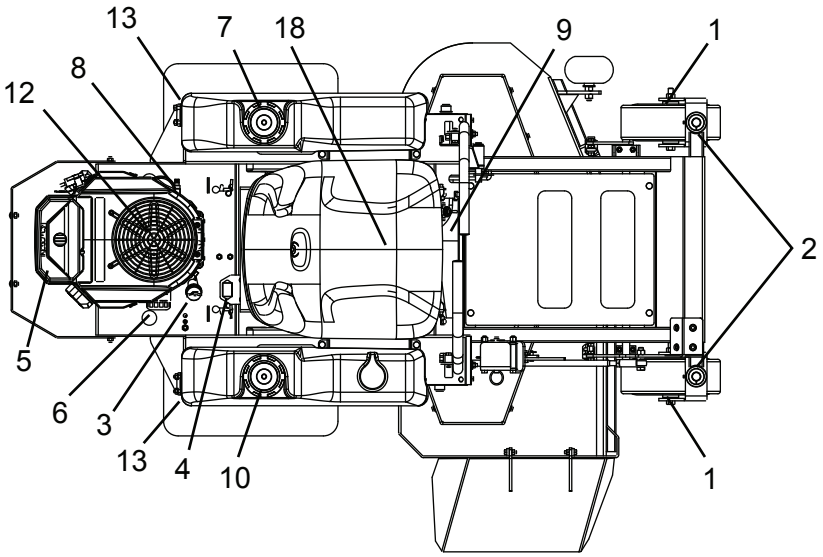

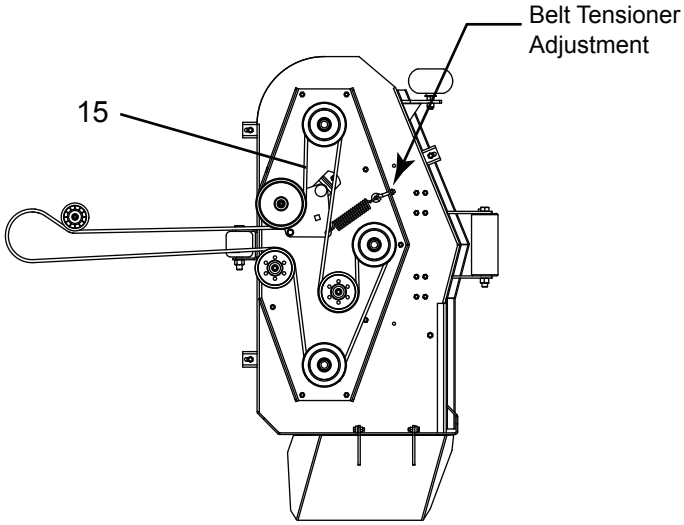

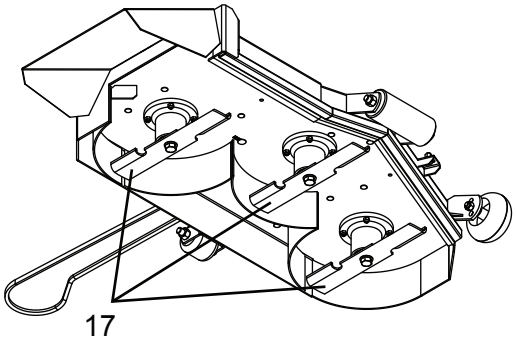

VIEWED FROM UNDER OF DECK

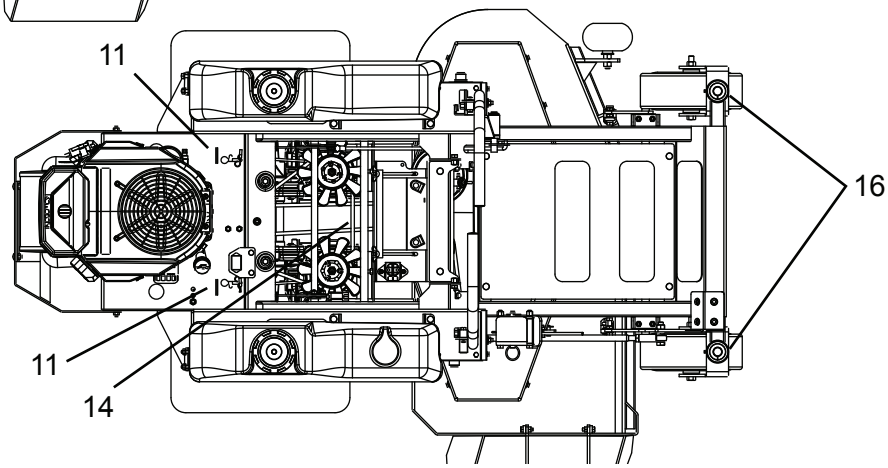

VIEWED FROM TOP OF UNIT

Figure 2

Deck Components

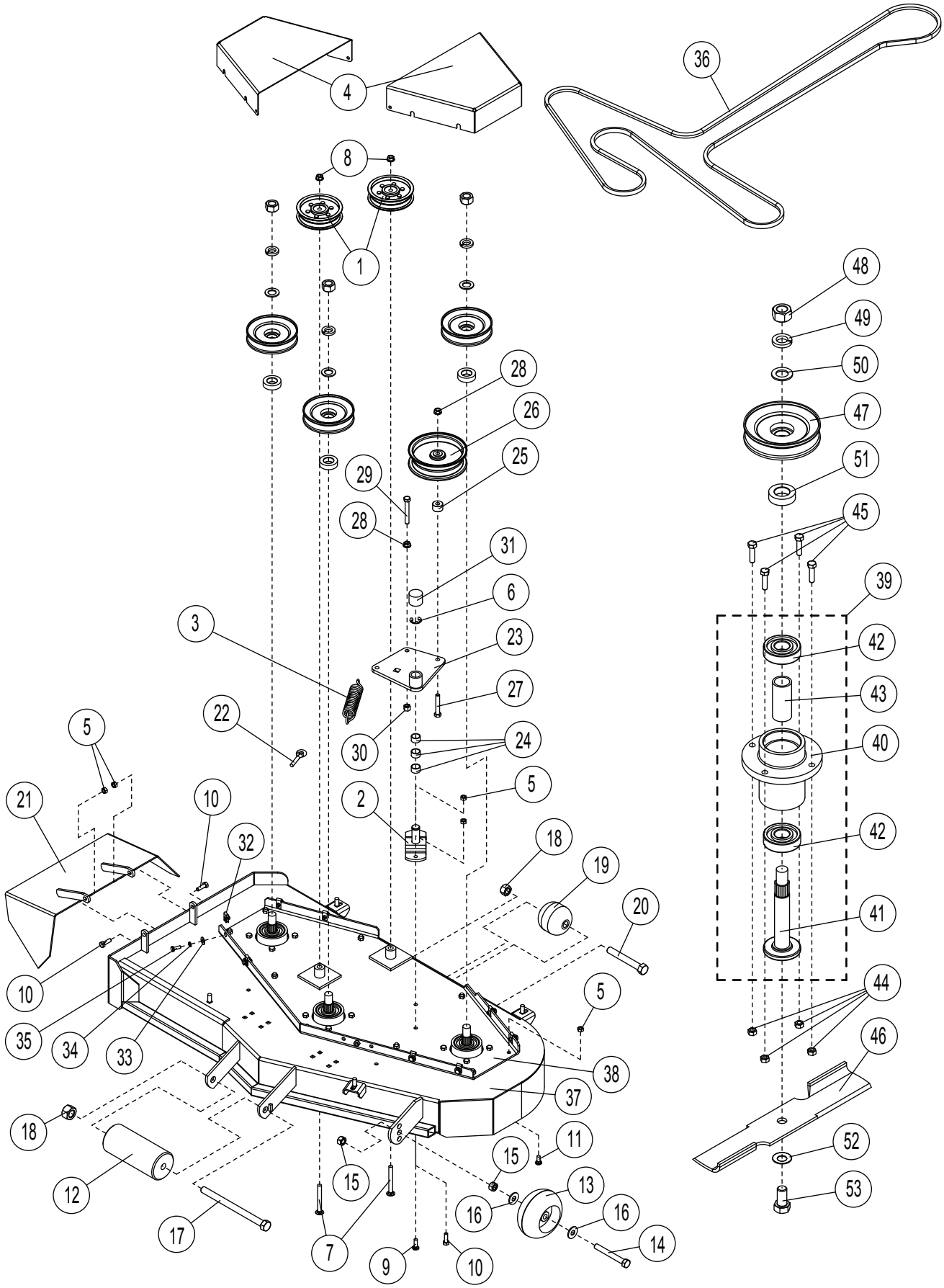

Deck Components

#	PART NUMBER	DESCRIPTION	QTY.
1	523329	FLOATING IDLER - FLAT	2
2	522104	OFFSET PIVOT	1
3	523327	FLOATING IDLER SPRING	1
4	353116	42 BELT SHIELD	2
5	104256	5/16-18 NYLOC NUT	34
6	108509	3/4 E-RING	1
7	107506	3/8-16 X 3-1/4 CARRIAGE BOLT	2
8	109007	3/8 – 16 WHIZ LOCK NUT	2
9	107509	5/16-18 X 1 CARR. BOLT	9
10	100273	5/16-18 X 1 HHCS	3
11	107503	5/16 - 18 X 3/4 CARR. HEAD	9
12	603023	FRONT ANT-SCALP ROLLER	1
13	423023	DECK ROLLER	1
14	100335	1/2-13 X 4 HHCS	1
15	104509	1/2-13 HEX NUT	2
16	105264	1/2 STD FLATWASHER	2
17	100351	5/8-11 X 8-1/2 HHCS	1
18	104261	5/8-11 HEX NUT	2
19	523084	REAR DECK ROLLER	1
20	100346	5/8-11 X 4-1/2 HHCS	1
21	582025	GRASS DEFLECTOR WLDMNT	1
22	363080	RIGHT EYEBOLT	1
23	352045	IDLER ARM W/BUSHINGS	1
24	363089	BRONZE BUSHINGS	3
25	823309	FRAME SPACER	1
26	533114	ENGAGEMENT IDLER	1
27	100297	3/8-16 X 2-1/4 HHCS	1
28	109007	3/8 – 16 WHIZ LOCK NUT	2
29	100299	3/8-16 X 2-3/4 HHCS	1
30	104257	3/8-16 NYLOC NUT	1
31	103009	CAPLUG 1-1/4	1
32	109015	1/4 - 20 NUT CLIP	8
33	105256	1/4 STD FLAT WASHER	8
34	105004	1/4 STD. LOCKWASHER	8
35	100252	1/4-20 X 3/4 HHCS	8
36	353114	42 DECK BELT	1
37	352036	42" DECK	1
38	352034	42 DECK PLATE	1
39	583106	BLADE SPINDLE ASSY	3

Deck Components

#	PART NUMBER	DESCRIPTION	QTY.
40	583111	SPINDLE HOUSING	3
41	583112	SPINDLE SHAFT	3
42	363350	BEARING - BLADE SPINDLE	6
43	583113	BEARING SPACER TUBE	3
44	104256	5/16-18 NYLOC NUT	12
45	100274	5/16-18 X 1-1/4 HHCS	12
46	423029	14.25 HIGH LIFT BLADE	3
47	423262	5" HEX PULLEY	3
48	104511	3/4-16 HEX NUT	3
49	105010	3/4 LOCK WASHER	3
50	105269	3/4 SAE FLAT WASHER	3
51	583110	PULLEY SPACER	3
52	583108	5/8 DISC SPRING WASHER	3
53	100355	5/8-11 X 1-1/4 HHCS	3

NOTE:

Deck Lift Components

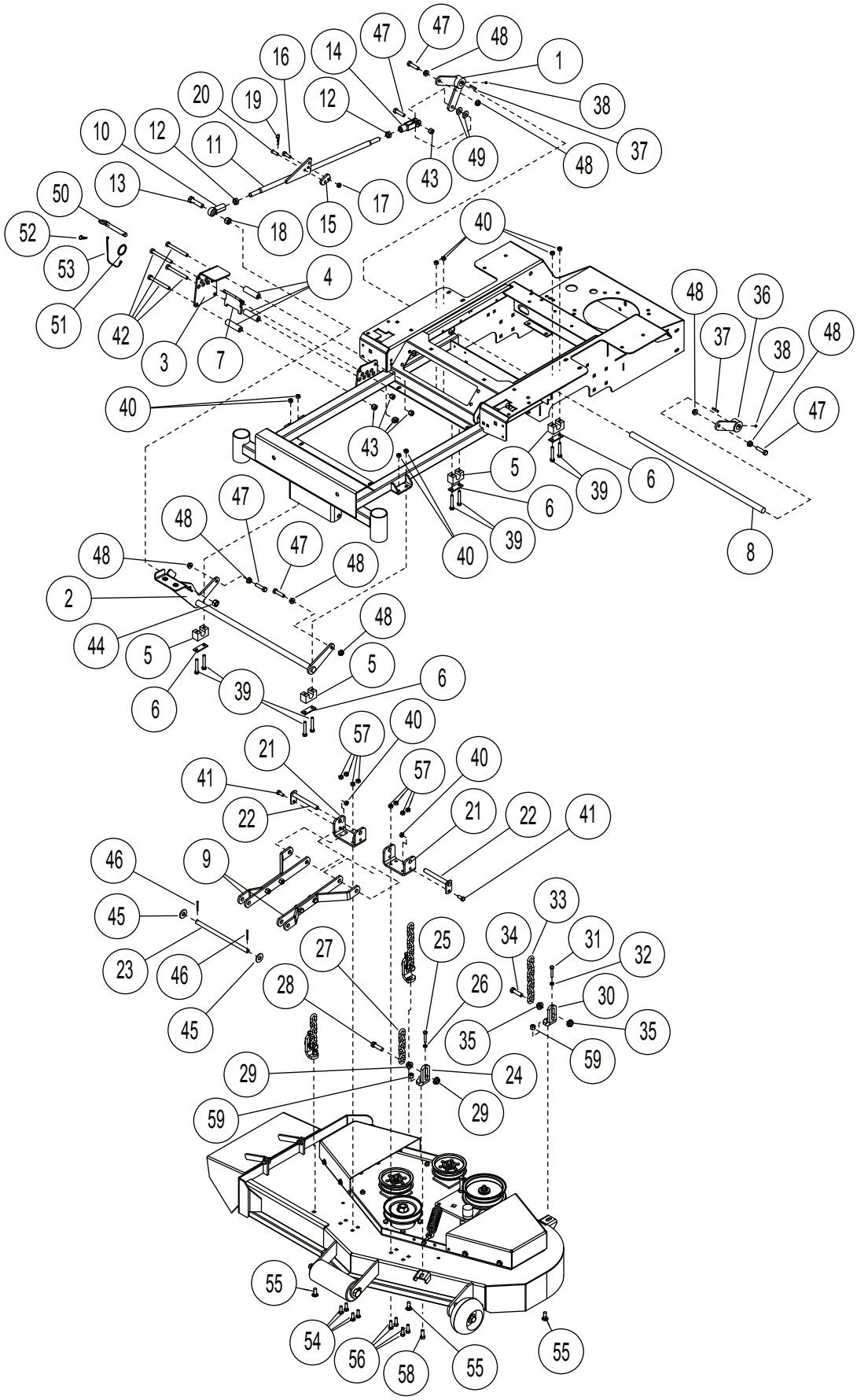

Deck Lift Components

#	PART NUMBER	DESCRIPTION	QTY.
1	352010	REAR LIFT BELLCRANK, RT	1
2	352014	FRONT LIFT SHAFT	1
3	353043	HEIGHT PLATE, OUTER	1
4	353040	HEIGHT PLATE SPACER	3
5	353028	PIVOT BLOCK	4
6	353047	PIVOT BLOCK PLATE	4
7	352018	TRANSPORT LATCH	1
8	533010	LIFT SHAFT- FRONT	1
9	------	STRUT ASM. (ORDER ITEM 60,61)	2
10	533084	ROD END 1/2"	1
11	352028	CONNECTING ROD	1
12	104755	1/2-20 HEX JAM NUT	2
13	100329	1/2-13 X 2 HHCS	1
14	533083	CLEVIS END 1/2"	1
15	353038	HEIGHT ADJUST TAB	1
16	100273	5/16-18 X 1 HHCS	1
17	104256	5/16-18 NYLOC NUT	1
18	104509	1/2-13 HEX NUT	1
19	363165	#3 HAIRPIN COTTOR	1
20	363144	CLEVIS PIN 5/16	1
21	353045	STRUT MOUNT	2
22	352032	REAR STRUT PIVOT PIN	2
23	353110	FRONT STRUT PIN	1
24	533112	ADJUSTABLE CHAIN MT.	2
25	100006	1/4-20 X 1.5 HH TAP BOLT	2
26	104758	1/4-20 HEX JAM NUT	2
27	423359	FRONT CHAIN	2
28	100311	7/16-14 X 1-1/2 HHCS	2
29	109027	7/16-14 WHIZLOCK NUT	4
30	533112	ADJUSTABLE CHAIN MT.	2
31	100006	1/4-20 X 1.5 HH TAP BOLT	2
32	104758	1/4-20 HEX JAM NUT	2
33	423360	REAR CHAIN	2
34	100311	7/16-14 X 1-1/2 HHCS	2
35	109027	7/16-14 WHIZLOCK NUT	4
36	352012	REAR LIFT BELLCRANK, LT	1
37	107255	3/16 X 3/16 X 1 MACHINE KEY	2
38	103292	1/4-28 SETSCREW	2
39	100277	5/16-18 X 2 HHCS	8

Deck Lift Components

#	PART NUMBER	DESCRIPTION	QTY.
40	104256	5/16-18 NYLOC NUT	10
41	100271	5/16-18 X 3/4 HHCS	2
42	100302	3/8-16 X 3-1/2 HHCS	4
43	104257	3/8-16 NYLOC NUT	5
44	104259	1/2-13 NYLOCK NUT	1
45	105264	1/2 STD FLATWASHER	2
46	106763	1/2 X 1 1/4 COTTER PIN	2
47	100294	3/8-16 X 1-1/2 HHCS	5
48	109007	3/8 – 16 WHIZ LOCK NUT	8
49	105260	3/8 STD FLAT WASHER	2
50	353153	1/2 X 3 RING PIN	1
51	109002	1-1/2 O.D. SPLIT RING	1
52	153025	# 4 HAIRPIN COTTER - PLTD.	1
53	123012	SAFETY CHAIN	1
54	107509	5/16-18 X 1 CARR. BOLT	4
55	107526	1/4-20 X 3/4" CARR BOLT	3
56	100273	5/16-18 X 1 HHCS	4
57	104256	5/16-18 NYLOC NUT	8
58	100292	3/8-16 X 1 HHCS	1
59	104257	3/8-16 NYLOC NUT	4
60	353050	STRUT BENT	2
61	353052	STRUT STRAIGHT	2

NOTE:

Frame Components

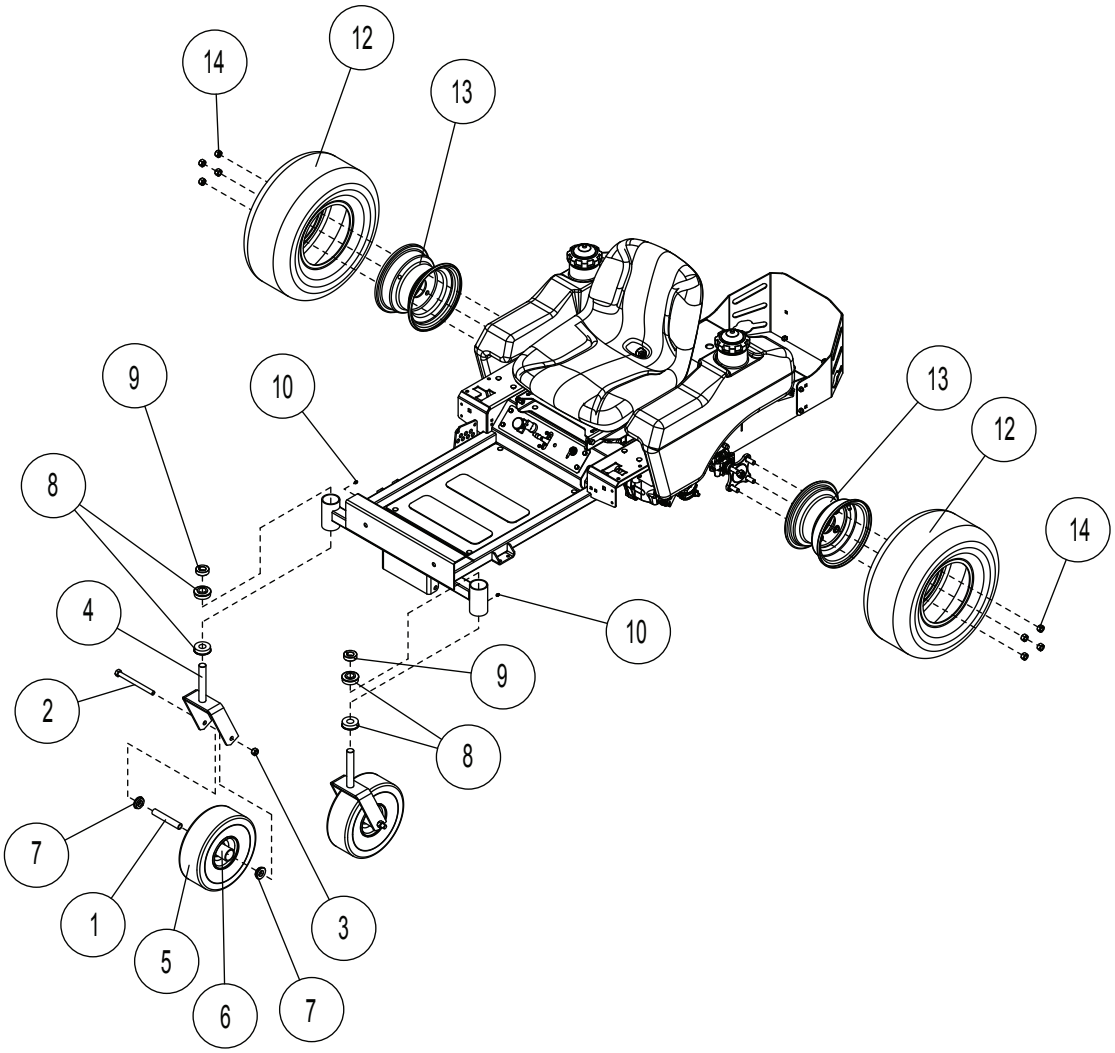

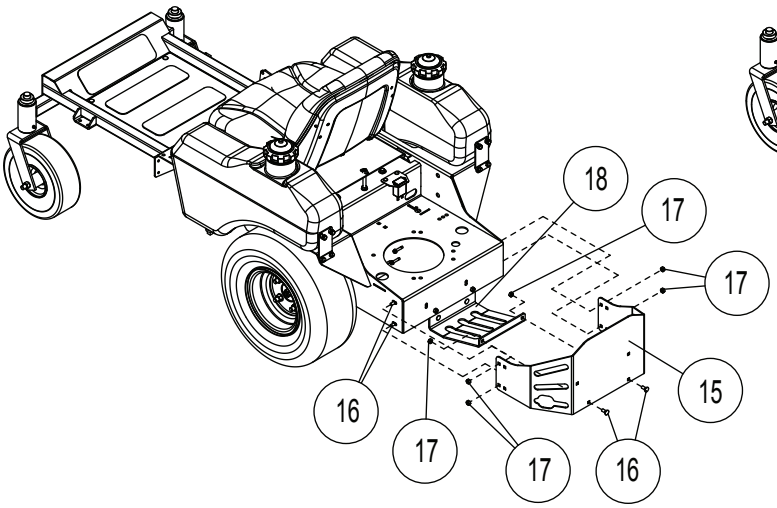

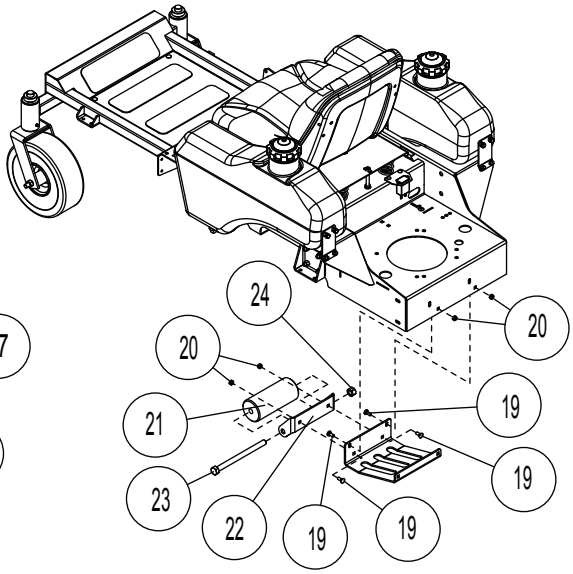

Frame Components

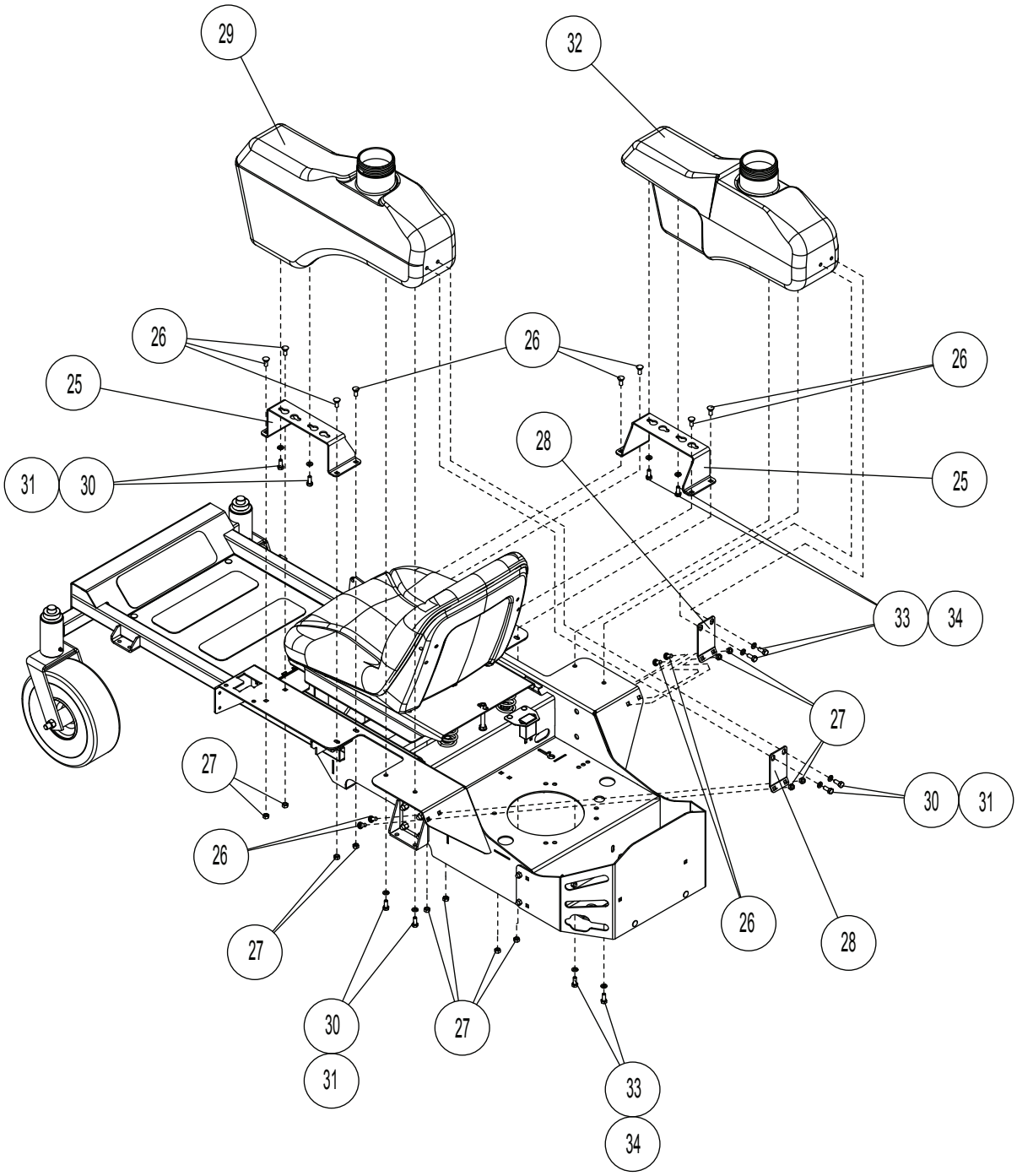

Frame Components

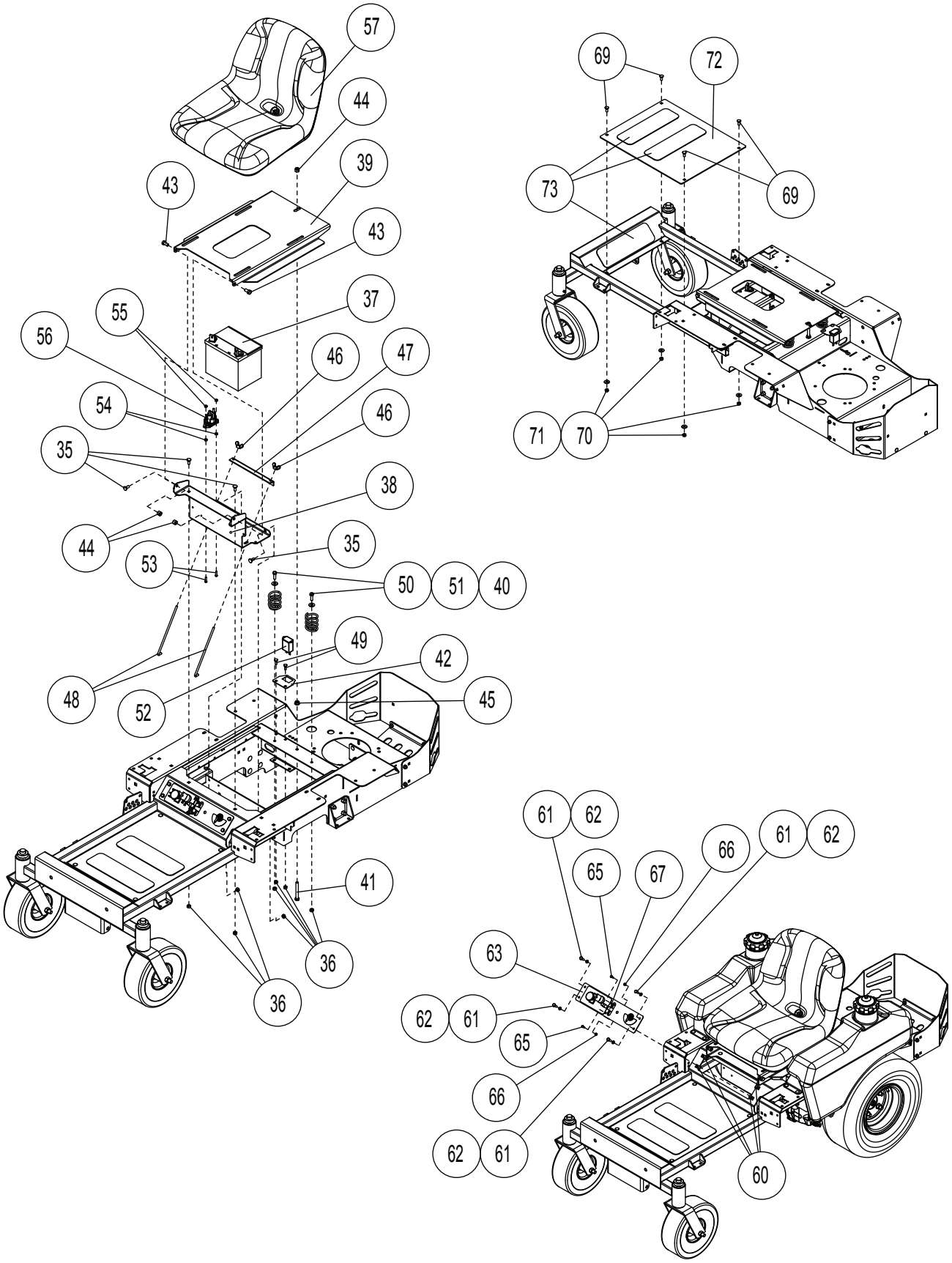

Frame Components

#	PART NUMBER	DESCRIPTION	QTY.
1	363307	AXLE TUBE	2
2	100339	1/2-13 X 6 HHCS	2
3	104259	1/2-13 NYLOCK NUT	2
4	422016	FRONT CASTER YOKE WELDMENT	2
5	363260	FRONT TIRE W/TUBE (4.10 X 3.50 X 4)	2
6	363311	FRONT CASTER COMPLETE	2
--	------	FRONT RIM NOT SERVICED	2
7	423201	BEARING RETAINER	2
8	423109	7/8 FLANGE BEARING	4
9	423071	7/8 CLAMP COLLAR	2
10	111001	1/8 NPT STRAIGHT	2
11	353126	18 X 9.50 - 8 TIRE ASM. (NOT SHOWN)	2
12	353148	DRIVE TIRE (18 X 9.5 X 8)	2
13	353149	RIM W/VALVESTEM	2
14	103023	1/2-20 LUG NUT	8
15	353075	ENGINE GUARD	1
16	107503	5/16 - 18 X 3/4 CARR. HEAD	6
17	104256	5/16-18 NYLOC NUT	6
18	353100	SKID PLATE	1
19	107503	5/16 - 18 X 3/4 CARR. HEAD	6
20	104256	5/16-18 NYLOC NUT	6
21	603023	FRONT ANT-SCALP ROLLER	1
22	353145	WHEELIE BAR	1
23	100351	5/8-11 X 8-1/2 HHCS	1
24	104261	5/8-11 HEX NUT	1
Items 1 thru 24 shown on page D-1			
25	353067	TANK SUPPORT	2
26	107503	5/16 - 18 X 3/4 CARR. HEAD	18
27	104256	5/16-18 NYLOC NUT	17
28	353085	REAR TANK MOUNT	2
29	SEE FUEL SECTION	LH FUEL TANK	1
30	100271	5/16-18 X 3/4 HHCS	1
31	105005	5/16 LOCK WASHER	1
32	SEE FUEL SECTION	RH FUEL TANK	1
33	100271	5/16-18 X 3/4 HHCS	1
34	105005	5/16 LOCK WASHER	1
Items 25 thru 34 shown on page D-2			
35	107503	5/16 - 18 X 3/4 CARR. HEAD	22
36	104256	5/16-18 NYLOC NUT	17
37	423142	BATTERY	1
38	353011	BATTERY TRAY	1
39	353015	SEAT PAN	1

Frame Components

#	PART NUMBER	DESCRIPTION	QTY.
40	523278	SEAT SPRING	2
41	100030	3/8-16 X 3 HHTB	1
42	353083	HOUR METER MOUNT	1
43	100291	3/8-16 X 3/4 HHCS	2
44	104257	3/8-16 NYLOC NUT	2
45	109007	3/8 – 16 WHIZ LOCK NUT	1
46	109012	1/4 WING NUT	2
47	423011	HOLD DOWN ANGLE	1
48	423172	BATTERY HOLD DOWN	2
49	107502	1/4-20 X 3/4 CARR. BOLT	2
50	100273	5/16-18 X 1 HHCS	2
51	105258	5/16 STD FLAT WASHER	2
52	523283	HOUR METER	1
53	109009	#10-24 X .75 HHS	2
54	109006	#10 WHIZLOCK NUT	2
55	104252	#10-24 NYLOC NUT	2
56	422150	STARTER RELAY - WP	1
57	353249	SEAT, FUZION, NO ARMREST	1
58	------	----------	-
59	353048	SEAT SWITCH (NOT SHOWN)	1
60	109015	1/4 - 20 NUT CLIP	4
61	100252	1/4-20 X 3/4 HHCS	4
62	105004	1/4 STD. LOCKWASHER	4
63	353177	CONSOLE PLATE W/CHOKE	1
64	523031	PTO SWITCH (NOT SHOWN)	1
65	101039	#10-24 X 5/8 PAN HD. SCREW	2
66	104252	#10-24 NYLOC NUT	2
67	593043	THROTTLE CONTROL	1
68	423027	IGNITION SWITCH (NOT SHOWN)	1
69	107503	5/16 - 18 X 3/4 CARR. HEAD	22
70	104256	5/16-18 NYLOC NUT	17
71	105258	5/16 STD FLAT WASHER	2
72	353079	FLOOR PAN	1
73	423302	Z-STEP TREAD	3
Items 35 thru 73 shown on page D-3			

NOTE:

Drive Components

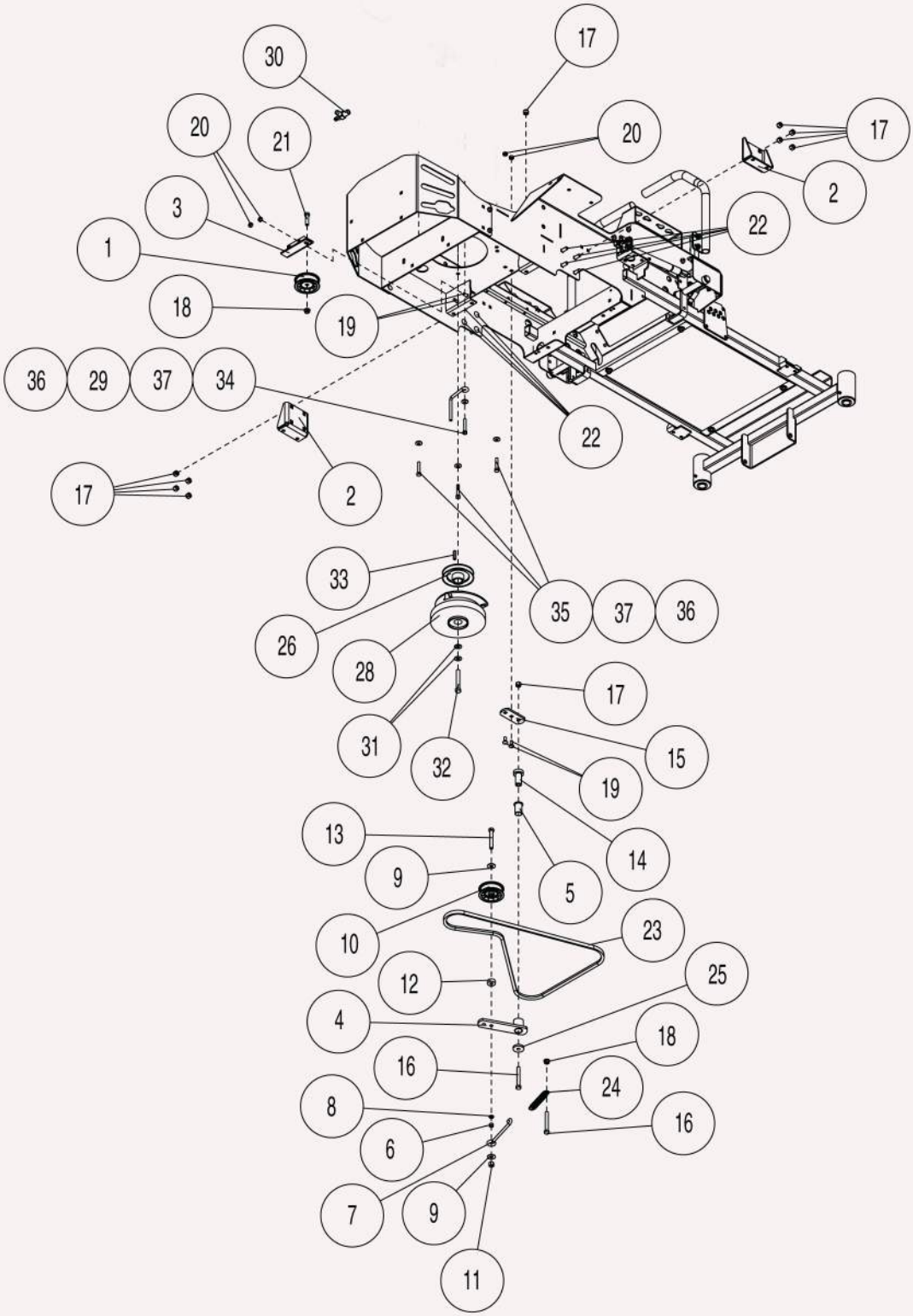

Drive Components

#	PART NUMBER	DESCRIPTION	QTY.
1	353207	PUMP DRIVE IDLER	1
2	352026	AXLE SUPPORT	2
3	353087	IDLER MOUNT	1
4	422025	TENSIONER W/BUSHING	1
5	523111	3/4 PLASTIC BUSHING	1
6	363174	EYE BOLT SPACER	1
7	423122	PUMP TENSION ROD	1
8	105005	3/8 LOCK WASHER	1
9	105260	3/8 STD FLAT WASHER	2
10	823351	PUMP DRIVE IDLER	1
11	104257	3/8-16 NYLOC NUT	1
12	483017	RH IDLER SPACER	1
13	100299	3/8-16 X 2-3/4 HHCS	1
14	423175	IDLER PIVOT	1
15	353089	PUMP IDLER MOUNT	1
16	100300	3/8-16 X 3 HHCS	2
17	104257	3/8-16 NYLOC NUT	10
18	109007	3/8 – 16 WHIZ LOCK NUT	2
19	107503	5/16 - 18 X 3/4 CARR. HEAD	4
20	104256	5/16-18 NYLOC NUT	4
21	100294	3/8-16 X 1-1/2 HHCS	1
22	107526	1/4-20 X 3/4" CARR BOLT	8
23	353112	PUMP BELT	1
24	553007	IDLER SPRING	1
25	373089	RETAINING WASHER	1
26	353201	PULLEY	1
28	353202	CLUTCH	1
29	373070	BELT GUIDE - LONG	1
30	423406	OIL DRAIN VALVE 3/8 NPT	1
31	423069	7/16 DISC SPRING WASHER	2
32	100536	5/8-11 X 7 HHCS	1
33	107260	1/4 X 1/4 X 1.25	1
34	100277	5/16-18 X 2 HHCS	1
35	100276	5/16-18 X 1-3/4 HHCS	3
36	104256	5/16-18 NYLOC NUT	6
37	363226	5/16 DISC SPRING WASHER	4

NOTE:

Control Components - Right Hand

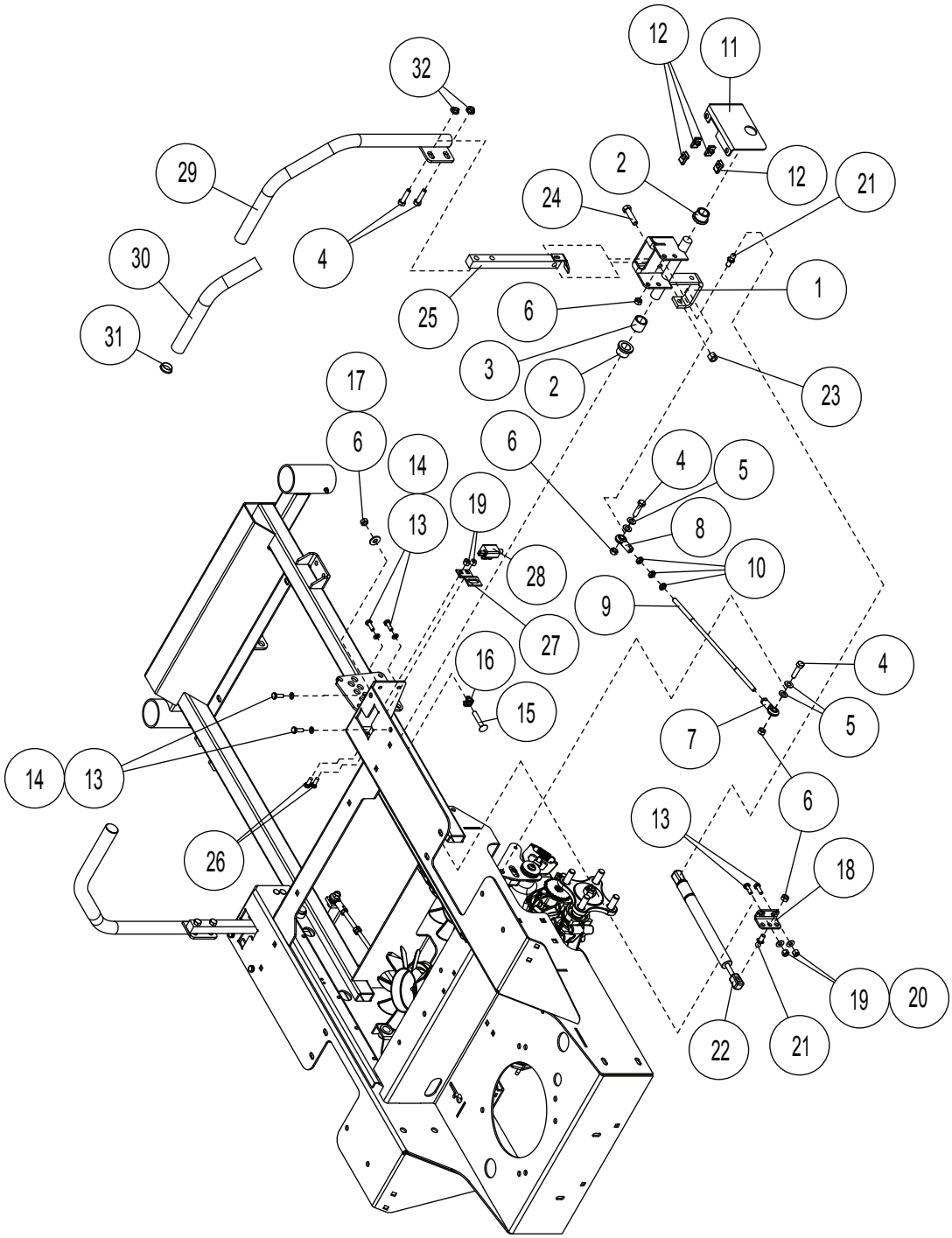

ITEM 7

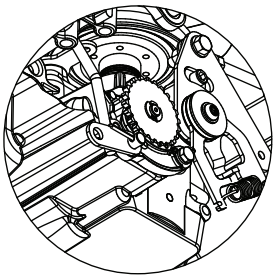

MOUNTING VIEW

ITEM 8

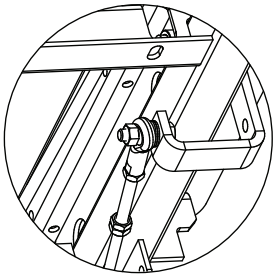

MOUNTING VIEW

ITEM 18

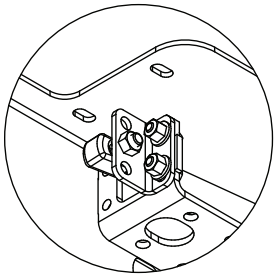

MOUNTING VIEW

Control Components - Right Hand

#	PART NUMBER	DESCRIPTION	QTY.
1	352004	STEERING CONTROL RT	1
2	353018	3/4" FLANGE BEARING	2
3	353024	DRIVE CONTROL SPACER	1
4	100274	5/16-18 X 1-1/4 HHCS	8
5	105257	5/16 SAE FLATWASHER	8
6	104256	5/16-18 NYLOC NUT	13
7	623095	5/16 LH ROD END (F)	2
8	453081	.312 ROD END (F)	2
9	353093	DRIVE LINKAGE	2
10	104752	5/16-24 JAM NUT	6
11	353061	RT CONTROL BRACKET	1
12	109015	1/4 - 20 NUT CLIP	4
13	100252	1/4-20 X 3/4 HHCS	6
14	105004	1/4 STD. LOCKWASHER	4
15	107520	5/16-18 X 1-3/4 TAP CARR. BOLT	1
16	353151	5/16-18 SQ. CAGE NUT	1
17	105258	5/16 STD FLAT WASHER	1
18	353143	DAMPENER MOUNT	1
19	104255	1/4-20 NYLOC NUT	6
20	105255	1/4" SAE WASHER	2
21	823221	10MM BALL STUD	2
22	583415	DAMPENER / CONTROL	1
23	104257	3/8-16 NYLOC NUT	1
24	100294	3/8-16 X 1-1/2 HHCS	1
25	352008	HANDLE MOUNT	1
26	107502	1/4-20 X 3/4 CARR. BOLT	2
27	353021	SWITCH BRACKET	1
28	593041	NEUTRAL SWITCH	1
29	592041	HANDLE RH W / GRIP	1
30	523032	HANDLE GRIP	1
31	523033	HANDLE PLUG	1
32	109001	5/16-18 WHIZLOCK NUT	2

NOTE:

Control Components - Left Hand

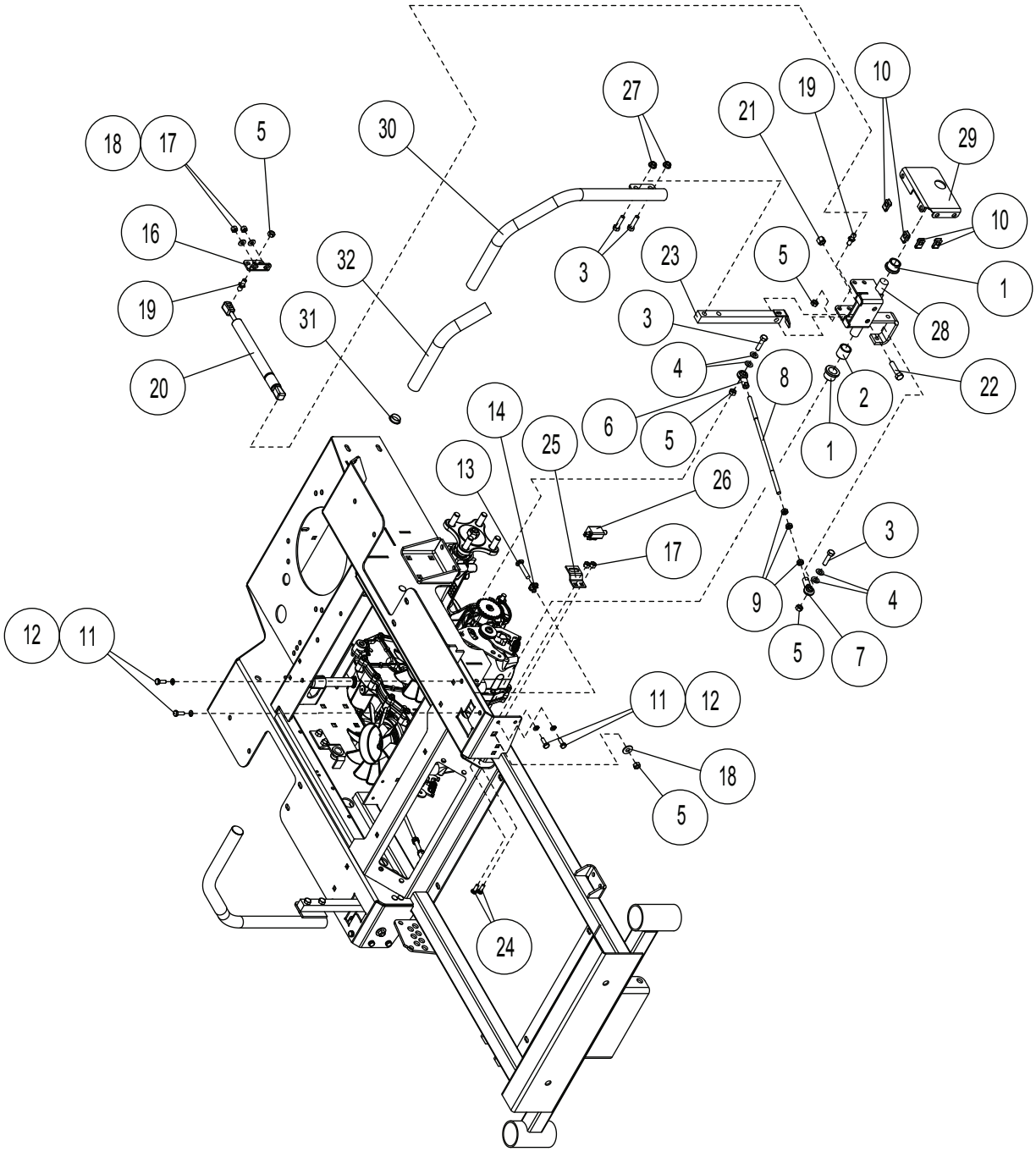

ITEM 7

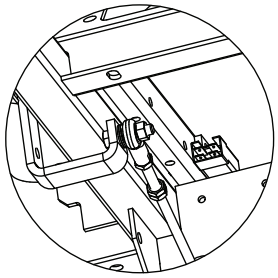

MOUNTING VIEW

ITEM 6

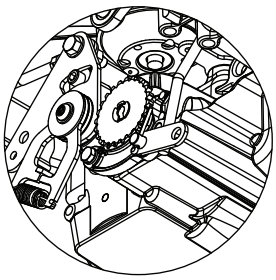

MOUNTING VIEW

ITEM 16

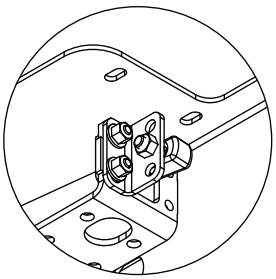

MOUNTING VIEW

Control Components - Left Hand

#	PART NUMBER	DESCRIPTION	QTY.
1	353018	3/4" FLANGE BEARING	2
2	353024	DRIVE CONTROL SPACER	1
3	100274	5/16-18 X 1-1/4 HHCS	8
4	105257	5/16 SAE FLATWASHER	8
5	104256	5/16-18 NYLOC NUT	11
6	623095	5/16 LH ROD END (F)	2
7	453081	.312 ROD END (F)	2
8	353093	DRIVE LINKAGE	2
9	104752	5/16-24 JAM NUT	6
10	109015	1/4 - 20 NUT CLIP	4
11	100252	1/4-20 X 3/4 HHCS	6
12	105004	1/4 STD. LOCKWASHER	4
13	107520	5/16-18 X 1-3/4 TAP CARR. BOLT	1
14	353151	5/16-18 SQ. CAGE NUT	1
15	105258	5/16 STD FLAT WASHER	1
16	353143	DAMPENER MOUNT	2
17	104255	1/4-20 NYLOC NUT	4
18	105255	1/4" SAE WASHER	2
19	823221	10MM BALL STUD	2
20	583415	DAMPENER / CONTROL	1
21	104257	3/8-16 NYLOC NUT	1
22	100294	3/8-16 X 1-1/2 HHCS	1
23	352008	HANDLE MOUNT	1
24	107502	1/4-20 X 3/4 CARR. BOLT	2
25	353021	SWITCH BRACKET	1
26	593041	NEUTRAL SWITCH	1
27	109001	5/16-18 WHIZLOCK NUT	4
28	352006	STEERING CONTROL LT	1
29	353063	LT CONTROL BRACKET	1
30	592042	HANDLE LH W / GRIP	1
31	523033	HANDLE PLUG	1
32	523032	HANDLE GRIP	1

NOTE:

Brake Components - Right Hand

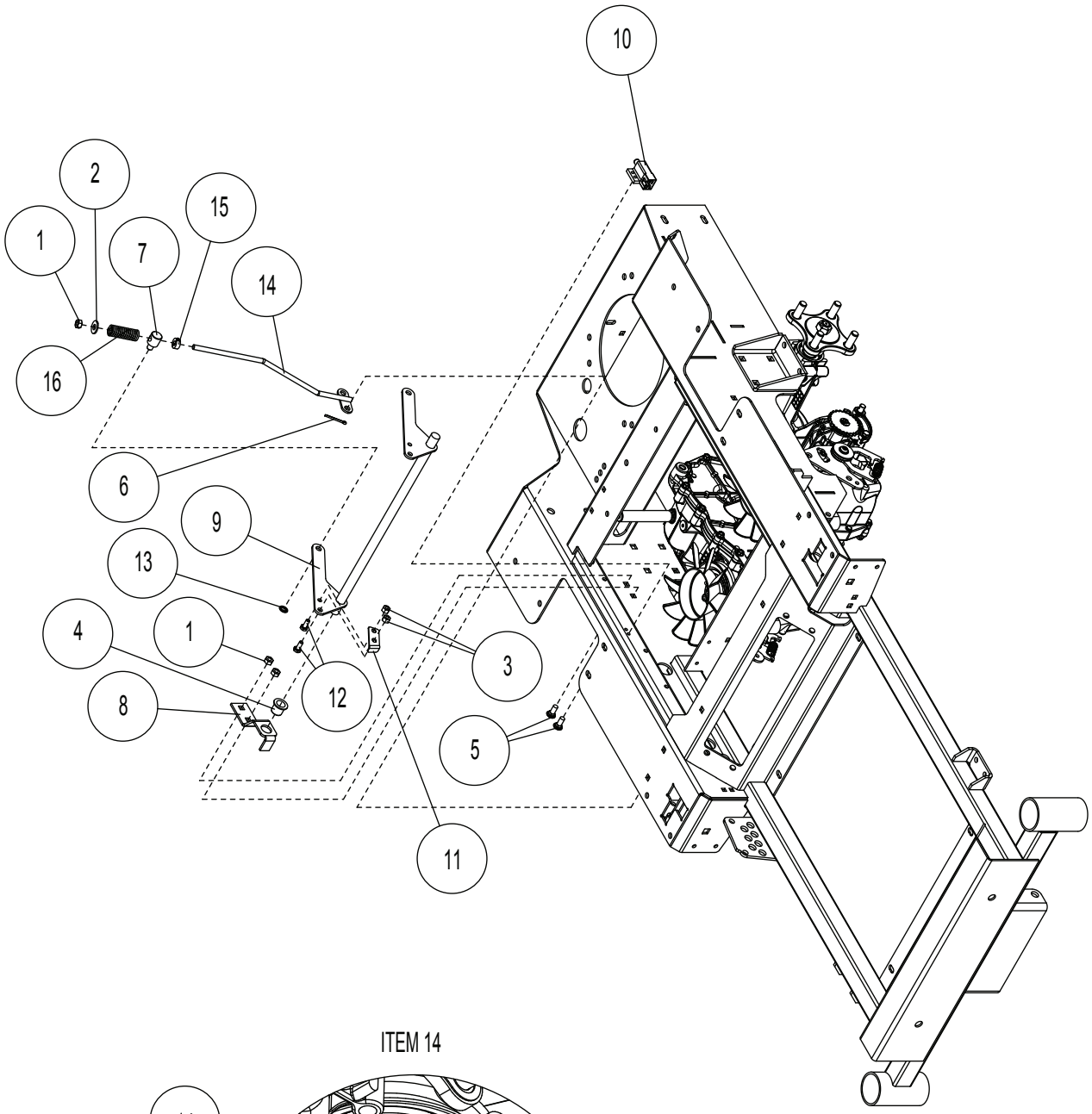

ITEM 14

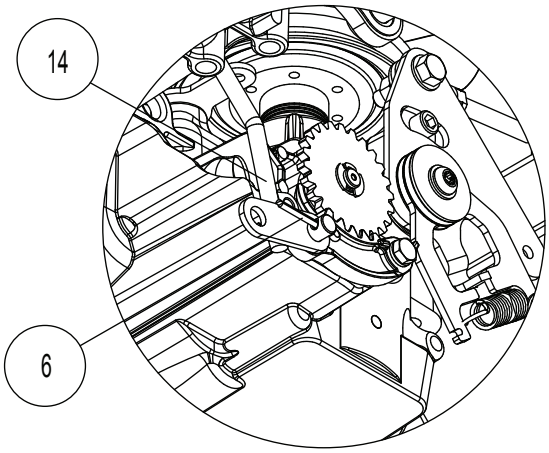

MOUNTING VIEW

Brake Components - Right Hand

#	PART NUMBER	DESCRIPTION	QTY.
1	104256	5/16-18 NYLOC NUT	4
2	105258	5/16 STD FLAT WASHER	1
3	104255	1/4-20 NYLOC NUT	2
4	353057	5/8 FLANGE BUSHING	1
5	107503	5/16 - 18 X 3/4 CARR. HEAD	2
6	106763	1/2 X 1 1/4 COTTER PIN	1
7	423130	PARK BRAKE SWIVEL	1
8	353059	BRAKE SHAFT MOUNT	1
9	352020	BRAKE SHAFT	1
10	523034	PARK BRAKE SWITCH	1
11	353073	BRAKE SWITCH ACTUATOR	1
12	100251	1/4-20 X 5/8 HHCS	2
13	363177	3/8 PUSH NUT	1
14	352042	LOWER BRAKE LINKAGE	1
15	523112	5/16 CLAMP COLLAR	1
16	523024	SPRING	1

NOTE:

Brake Components - Left Hand

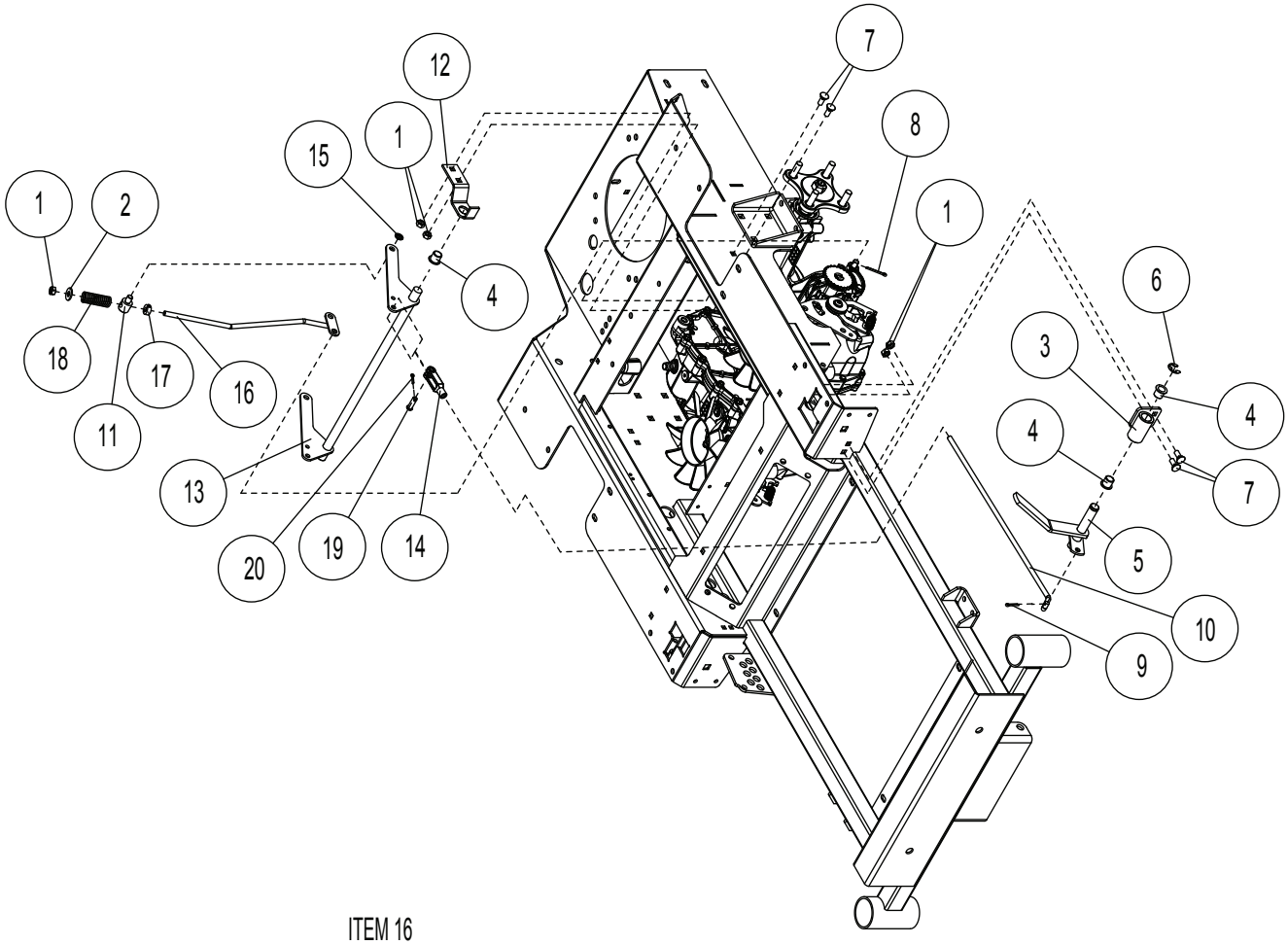

ITEM 16

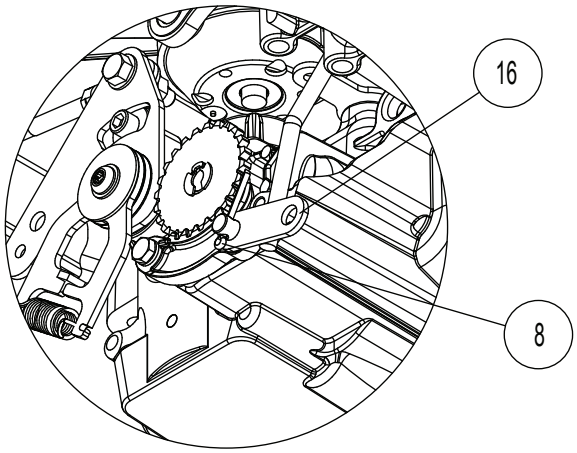

MOUNTING VIEW

Brake Components - Left Hand

#	PART NUMBER	DESCRIPTION	QTY.
1	104256	5/16-18 NYLOC NUT	6
2	105258	5/16 STD FLAT WASHER	1
3	352024	BRAKE LEVER PIVOT	1
4	353057	5/8 FLANGE BUSHING	3
5	352022	BRAKE LEVER	1
6	108500	E-RING FOR 5/8 DIA	1
7	107503	5/16 - 18 X 3/4 CARR. HEAD	4
8	106763	1/2 X 1 1/4 COTTER PIN	2
9	106753	3/32 X 3/4 COTTER PIN	1
10	353071	BRAKE LINKAGE	1
11	423130	PARK BRAKE SWIVEL	1
12	353059	BRAKE SHAFT MOUNT	1
13	352020	BRAKE SHAFT	1
14	363152	YOKE 5/16-24	1
15	363177	3/8 PUSH NUT	1
16	352042	LOWER BRAKE LINKAGE	2
17	523112	5/16 CLAMP COLLAR	1
18	523024	SPRING	1
19	363144	CLEVIS PIN 5/16	1
20	106763	COTTER PIN 1/8 X 3/4	1

NOTE:

Hydro Components

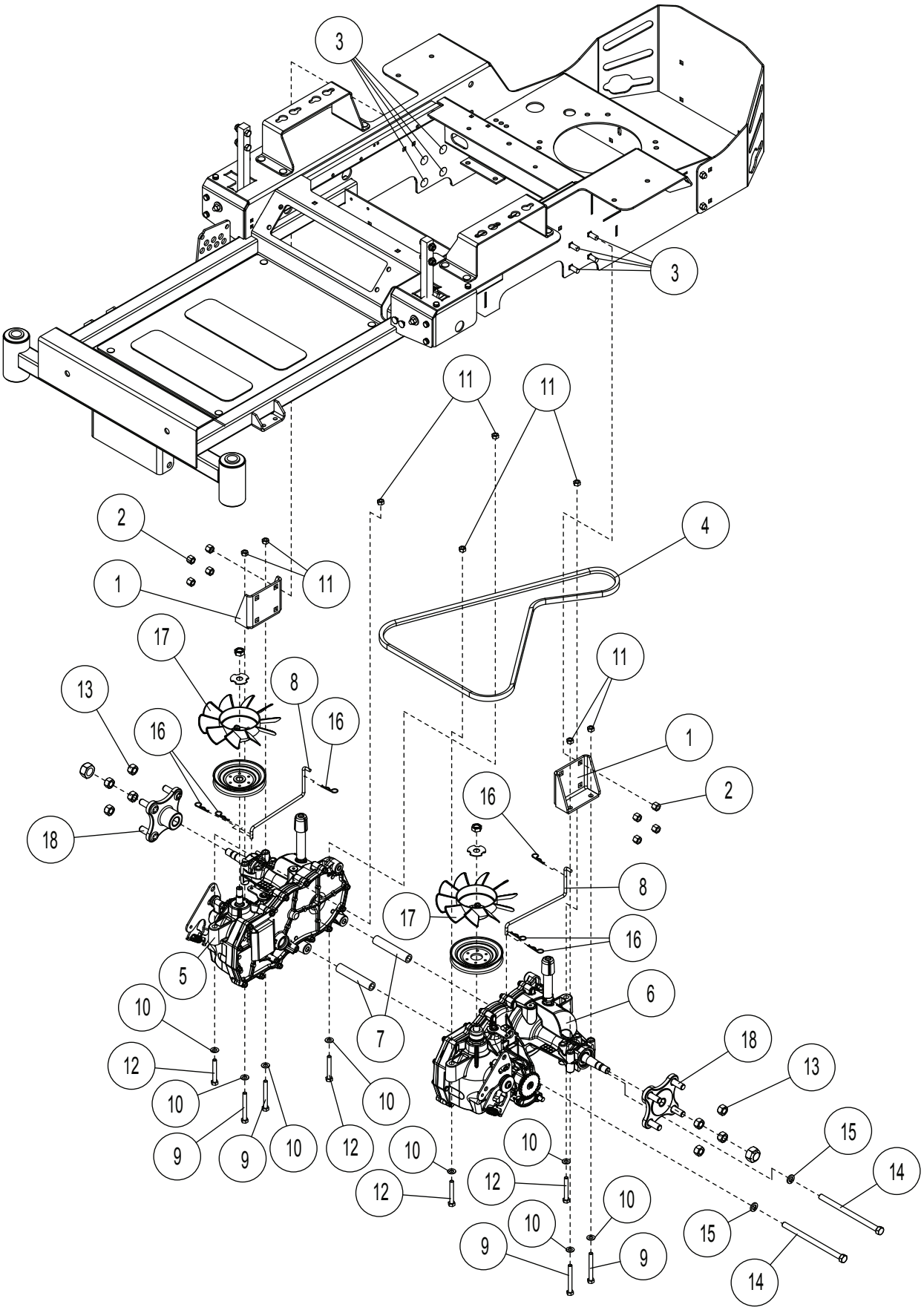

Hydro Components

ITEM	PART NO.	DESCRIPTION
1	353013	AXLE MOUNT
2	104257	3/8-16 NYLOC NUT
3	107526	1/4-20 X 3/4" CARR BOLT
4	353112	PUMP BELT
5	353127	EZT RH
6	353128	EZT LH
7	353118	TIE ROD
8	353091	BYPASS LINKAGE
9	100280	5/16-18 X 2-1/2 HHCS
10	105257	5/16 SAE FLATWASHER
11	104256	5/16-18 NYLOC NUT
12	100278	5/16-18 X 2-1/2
13	103023	1/2-20 LUG NUT
14	100321	7/16-14 X 7.0 HHCS
15	105007	7/16 ANSI STD LOCK WASHER
16	363165	#HAIRPIN COTTER
17	353189	FAN-PLASTIC CENTER
	353214	FAN-METAL CENTER
18	353190	HUB-SERVICE PART (HYDOGEAR #71093)

NOTE:

Fuel Components

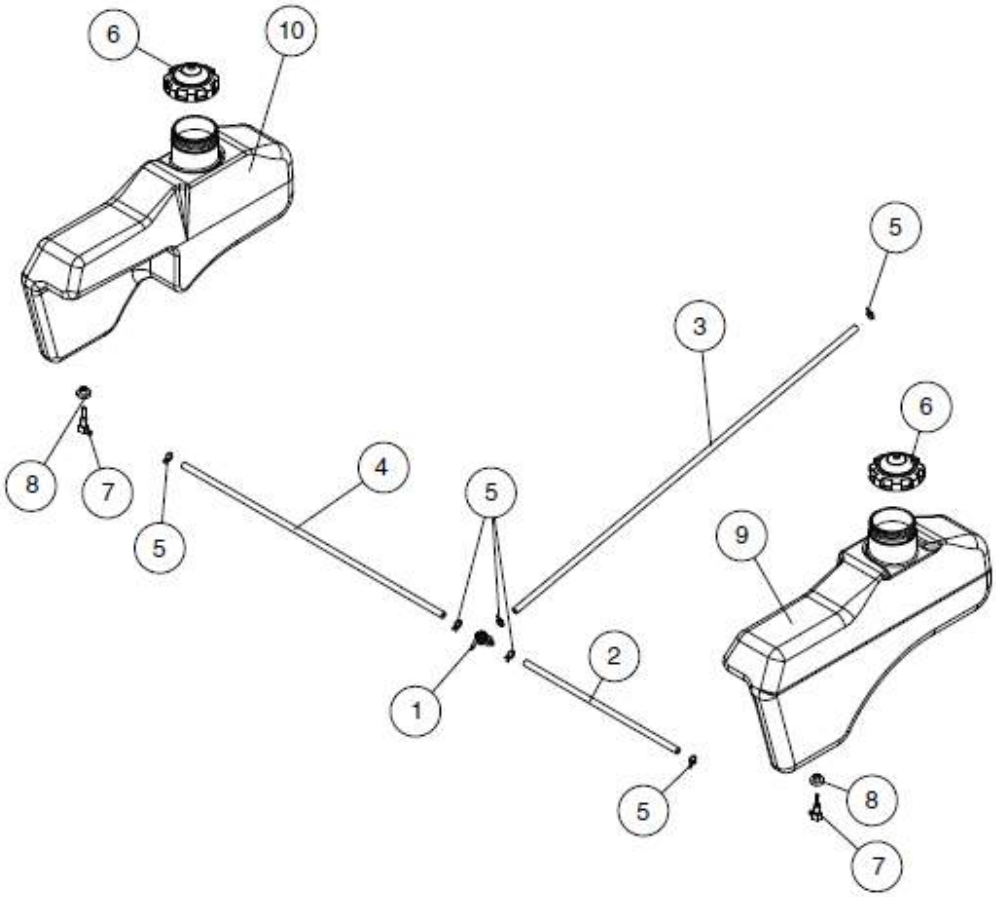

#	PART NO.	DESCRIPTION	QTY
1	583050	FUEL VALVE	1
2	363099	FUEL LINE – 17”	1
3	583185	FUEL LINE – 39”	1
4	823315	FUEL LINE – 27”	1
5	363098	FUEL LINE CLAMP	6
6	363413	FUEL CAP - EPA/CARB	2
7	583183	FUEL TANK ADAPTER	2
8	533125	VALVE GROMMET	2
9	3532pn	TANK, LOW PERM FUEL LH	1
10	3532po	TANK, LOW PERM FUEL RH	1
VENT SYSTEM PARTS NOT SHOWN			
	363412	GROMMET, VENT	2
	593370	REMOTE VENT	2
	353242	33” VENT LILNE (TO ENGINE)	1
	353223	22” VENT LINE (TO TANKS)	2
	623196	BRASS TEE	1

ENCORE PART # 353132
WIRE HARNESS FOR FS600V KAWASAKI
ENCORE PART #353180
KAW. WIRING PIGTAIL FOR KAWASAKI ENGINE

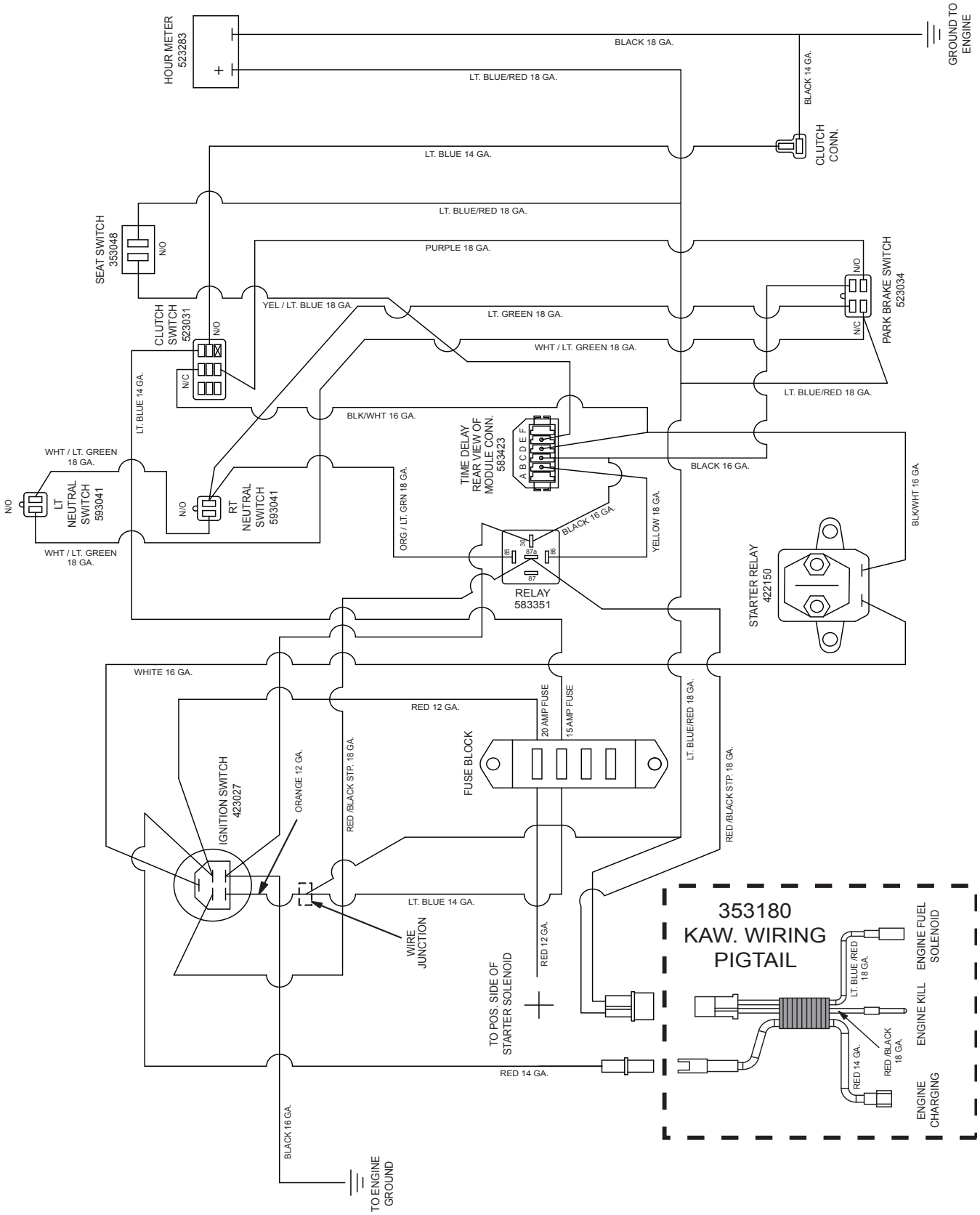

HYDRAULIC BYPASS RELEASE

- Pull linkage back in the slot and hook it in the nothch on both sides.
- Release park brake
- The machine can now be pushed or towed.

- Linkage must be slid forward in the slot for drive on both sides.

6

FUZION

10

CAUTION

1. READ AND UNDERSTAND OWNERS MANUAL BEFORE OPERATING EQUIPMENT.
2. BE SURE CONTROL LEVERS ARE IN NEUTRAL AND PARK BRAKE IS SET BEFORE STARTING ENGINE.
3. MOWER SHALL NOT BE USED UNLESS ALL GUARDS ARE IN PLACE.
4. KEEP HANDS, FEET & ALL OBJECTS FROM UNDER DECK. KEEP PEOPLE AND PETS AT A SAFE DISTANCE.
5. USE CAUTION ON SLOPES.
6. BEFORE LEAVING OPERATOR'S POSITION:
   A. PLACE CONTROL LEVERS IN NEUTRAL POSITION.
   B. DISENGAGE P.T.O. CLUTCH.
   C. ENGAGE PARK BRAKE.
7. DISCONNECT SPARK PLUG WIRE BEFORE CLEANING OR SERVICING.
8. DO NOT ADD FUEL WHILE ENGINE IS WARM OR RUNNING.

423155

2

CUTTING HEIGHT

TRANSPORT - 4.5"

4.0"-
- 3.5"
3.0"-
- 2.5"
2.0"-
- 1.5"
1.0"-

ADD 1/4" WHEN HEIGHT ADJUST TAB IS ROTATED UP.

7

FZ42

11

CAUTION

OPERATE MOWER WITH CHUTE DEFLECTOR BOLTED IN PLACE, EXCEPT WHEN USED WITH GRASS CATCHER. DO NOT REMOVE GRASS CATCHER UNTIL BLADE OR BLADES HAVE STOPPED.

360001

12

OFF

PARK BRAKE

ON

423156

3

FORWARD

NEUTRAL

REVERSE

8

DANGER

KEEP HANDS and FEET AWAY

13

WARNING

TO AVOID SERIOUS INJURY OR DEATH,

★ DO NOT ALTER ELECTRICAL SYSTEM. WRONG WIRING CONNECTIONS WILL DAMAGE ELECTRICAL COMPONENTS AND MAY MAKE THE SAFETY SWITCHES INOPERATIVE.

★ ALWAYS REMOVE JEWELRY BEFORE ATTEMPTING REPAIR OR REPLACEMENT OF ELECTRICAL COMPONENTS.

823326

4

WARNING

ROTATING DRIVE PARTS BENEATH

★ ENTANGLEMENT WITH ROTATING DRIVE PARTS CAN CAUSE INJURY OR DEATH.

★ DO NOT OPERATE WITHOUT THIS AND ALL OTHER SHIELDS IN PLACE AND IN GOOD CONDITION.

823323

5

PUSH FOOT PEDAL FORWARD AND PULL TOWARD YOU TO RELEASE TRANSPORT LATCH

9

CAUTION

Allow engine to cool for 2 minutes before refueling

To prevent fuel spill, fill tank to 1-1/2 inches below filler neck

In USA-use unleaded gasoline only

14

Decals

#	PART NO.	DESCRIPTION	QTY.
2	423155	DECAL, RIDER CAUTION	1
3	423156	DECAL, PARK LEVER	1
4	823320	DECAL, BATTERY WARNING	1
5	823323	DECAL, ROTATING PARTS	1
6	353125	DECAL, BYPASS	1
7	353129	DECAL, HEIGHT ADJUST	1
8	353130	DECAL, MOTION CONTROL	2
9	353131	DECAL, TRANSPORT	1
10	353174	DECAL, FUZION	1
11	353185	DECAL, 42" DECK	1
12	363001	DECAL, CAUTION	1
13	363023	DECAL, DANGER	2
14	363290	DECAL, CAUTION FUEL	1

NOTE:

A: THERE ARE NO REPLACEMENT DECALS FOR TANKS, BECAUSE THEY ARE MOLDED INTO THE TANK.

Notes

Notes

Notes

ENCORE
POWER EQUIPMENT

All rights reserved. Contents subject to change.