Parts Catalog

WORLDLAWN®

Commercial WY48 Mower

Worldlawn Power Equipment, Inc.

Industrial Park 2415 Ashland Ave. Beatrice, NE 68310

Toll Free Number: 1-800-267-4255

Table of Contents

Mower Assembly…… 1

Drive Wheel Assembly…… 2

Mower Deck Assembly…… 3

Rear Frame Assembly…… 5

Engine Assembly…… 7

Front Frame Assembly…… 9

Handle Bar and Console…… 11

Electrical Start-up Wiring Harness …… 13

Recoil Start-up Wiring Harness…… 14

Safety / Operation and Product Decals…… 15

Grass Catcher Assembly…… 17

Mower Assembly

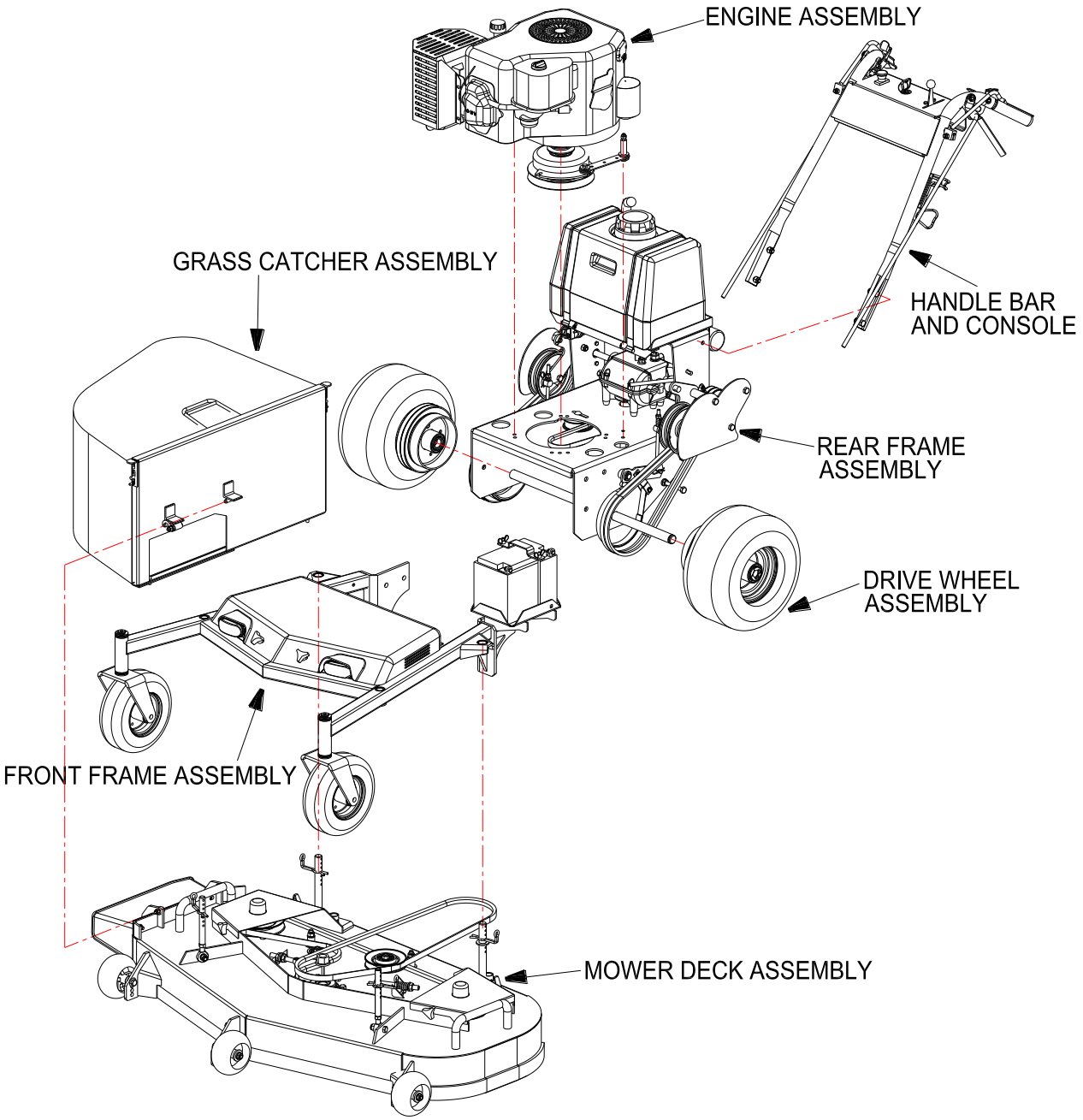

Drive Wheel Assembly

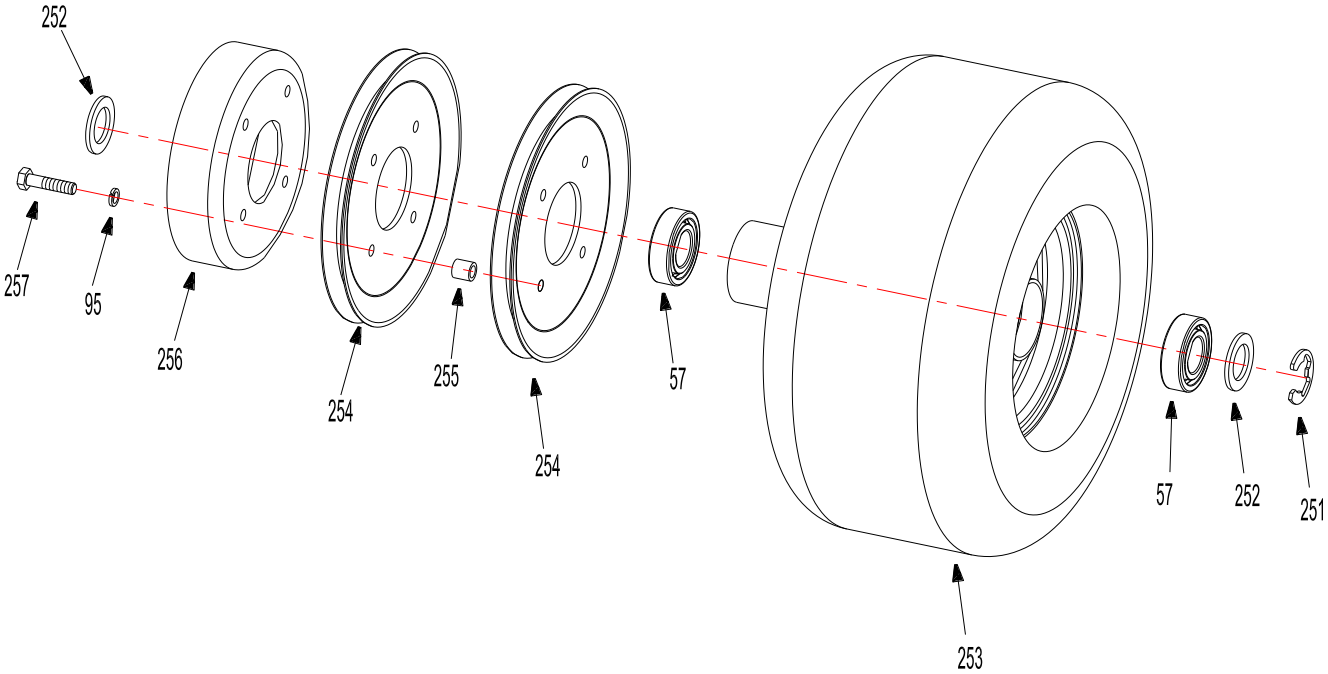

REF.	PART NO.	DESCRIPTION	48	48E	42	42E
57	B276-6205RS	Bearing 6205-2RS	×	×	×	×
95	B93-8	Split Lock Washer M8	×	×	×	×
251	XSZ56-2-06	Snap Ring M19	×	×	×	×
252	4809001	Washer	×	×	×	×
253	4809100	Drive Tire & Rim Assy	×	×	×	×

REF.	PART NO.	DESCRIPTION	48	48E	42	42E
254	4809002	Wheel Drive Pulley	×	×	×	×
255	4809003	Bushing	×	×	×	×
256	4809004	Brake Drum	×	×	×	×
257	B5783-835	Hex Hd Bolt M8×35	×	×	×	×

Mower Deck Assembly

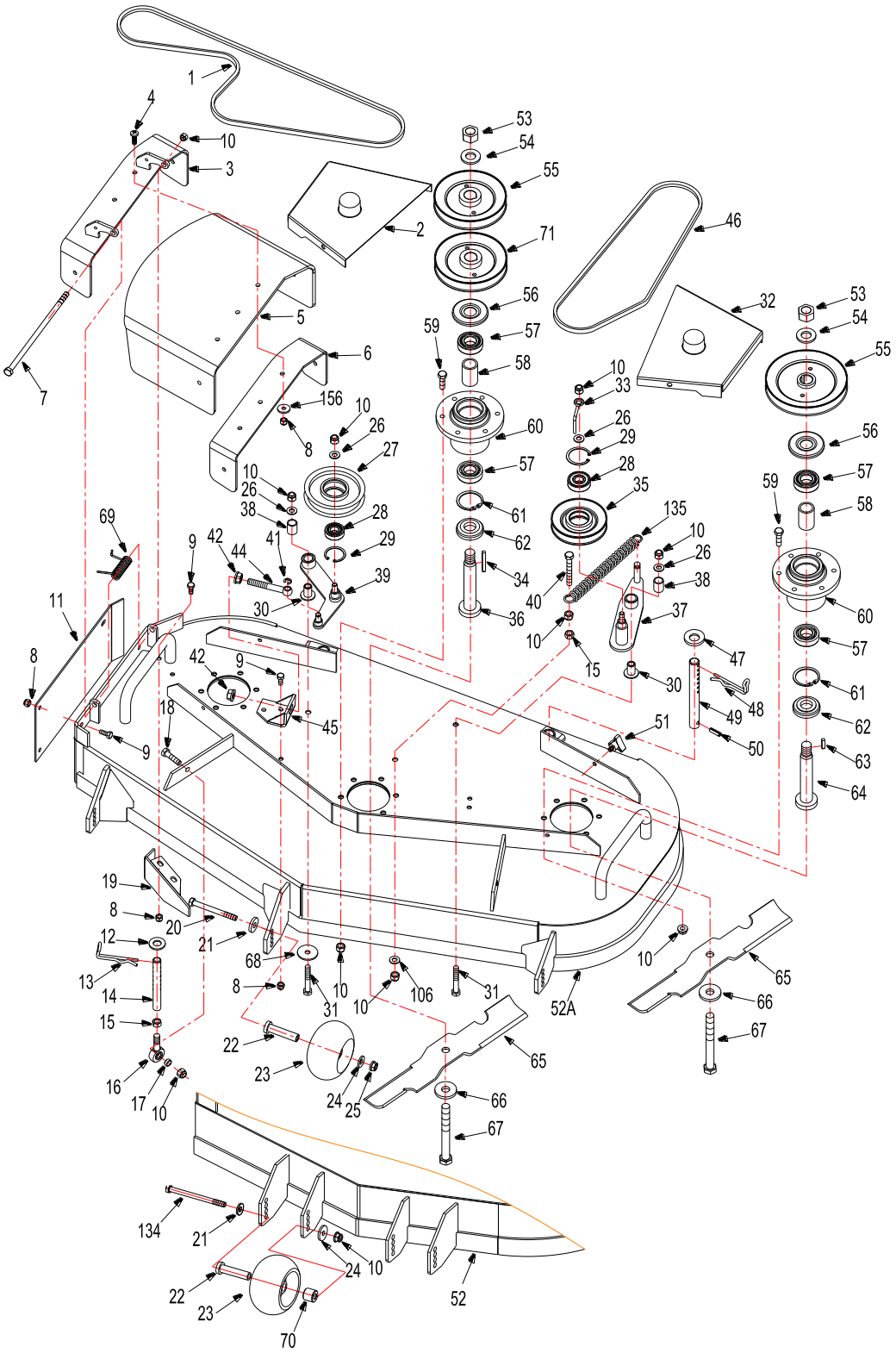

Mower Deck Assembly

REF.	PART NO.	DESCRIPTION	48	48E	42	42E
1	4201012	Blade Drive Belt			×	×
	4801007	Blade Drive Belt	×	×		
2	4201600A	Right Belt Cover			×	×
	4801600	Right Belt Cover	×	×		
3	4801060	Deflector Shield Weldment	×	×	×	×
4	B818-830	Phillips Screw M8×30	×	×	×	×
5	4801052	Deflector Shield	×	×	×	×
6	4801051	Deflector Shield Support Bkt	×	×	×	×
7	4801028	Long Bolt M10 (Deflector)	×	×	×	×
8	B6182-8	Locknut M8	×	×	×	×
9	B5783-820	Hex Hd Bolt M8×20	×	×	×	×
10	B6182-10	Locknut M10	×	×	×	×
12	B97.1-16	Flat Washer M16	×	×	×	×
13	4800008	Height Adjustment Pin-RH	×	×	×	×
14	4801301	Height Adjustment Rod-Front	×	×	×	×
15	B6170-10	Nut M10	×	×	×	×
16	B9163-10	Bearing SABJK10C	×	×	×	×
17	4801302	Bushing	×	×	×	×
18	B5783-1040	Bolt M10×40	×	×	×	×
19	4201008	Grass Board			×	×
	4801200A	Grass Board	×	×		
20	B5782-10100	Bolt M10×100	×	×	×	×
21	5201061	Washer	×	×	×	×
22	5201082	Scalp Roller Bushing	×	×	×	×
23	5201081	Anti-Scalp Roller	×	×	×	×
24	5201083	Washer	×	×	×	×
25	B6187.1-10	Nut M10	×	×		
26	3302058	Washer M10	×	×	×	×
27	3302056	Idler Pulley Assembly	×	×	×	×
28	B276-6303RS	Bearing 6303-2RS	×	×	×	×
29	B893.2-47	Snap Ring M47	×	×	×	×
30	4201801	Flange Bushing	×	×	×	×
31	B5782-1055	Hex Hd Bolt M10×55	×	×	×	×
32	4201700	Left Belt Cover			×	×
	4801700	Left Belt Cover	×	×		
33	4201802	Belt Hook	×	×	×	×
34	B1096-B650	Key B6×50	×	×	×	×
35	2802070	Idler Pulley	×	×	×	×
36	4201404	Spindle Shaft	×	×	×	×
37	4201810A	Left swing arm assembly	×	×	×	×
38	B2685-162025	Bearing16×20×25	×	×	×	×

REF.	PART NO.	DESCRIPTION	48	48E	42	42E
39	4201830	Right swing arm assembly	×	×	×	×
40	B5783-1080	Hex Hd Bolt M10×80	×	×	×	×
41	B896-8	Snap Ring M8	×	×	×	×
42	B6187-12	Nut M12	×	×	×	×
44	4201011	Swing Bolt (Long)	×	×	×	×
45	4201840	Right Tension Fixed Seat	×	×	×	×
46	4200001A	Blade Drive Belt			×	×
	4800005A	Blade Drive Belt	×	×		
47	B97.1-20	Washer M20	×	×	×	×
48	4800007	Height Adjustment Pin-LH	×	×	×	×
49	4801005	Height Adjustment Weldment-Rear	×	×	×	×
50	B879-826	Pin 8×26	×	×	×	×
51	3302190	Three-Arm Knob	×	×	×	×
52	4201100B	Mower Deck			×	×
52A	4801100B	Mower Deck	×	×		
53	B6171-20	Nut M20×1.5	×	×	×	×
54	5201048	Washer （2）	×	×	×	×
55	4201403	Blade Pulley			×	×
	4801403	Blade Pulley	×	×		
56	5201044	Top Dust Cover	×	×	×	×
57	B276-6205RS	Bearing 6205-2RS	×	×	×	×
58	5201049	Bushing	×	×	×	×
59	B5783-1035	Hex Hd Bolt M10×35	×	×	×	×
60	5201050	Spindle Housing	×	×	×	×
61	B893.2-52	Snap Ring M52	×	×	×	×
62	5201043	Bottom Dust Cover	×	×	×	×
63	B1096-B625	Key B6×25	×	×	×	×
64	4201405	Spindle Shaft	×	×	×	×
65	4201401	Blade			×	×
	4801401	Blade	×	×		
66	5201042	Washer （1）	×	×	×	×
67	B5785-1660	Bolt M16×1.5×60	×	×	×	×
68	5201067	Spacer	×	×	×	×
69	4801027	Spring	×	×	×	×
70	3602014	Bushing			×	×
71	4201406	Blade Pulley			×	×
	4801405	Blade Pulley	×	×		
106	4808002	Washer	×	×	×	×
134	B5782-10125	Bolt M10×125			×	×
135	4806004	Tension Spring	×	×	×	×
156	B97.1-8	Flat Washer M8	×	×	×	×

Rear Frame Assembly

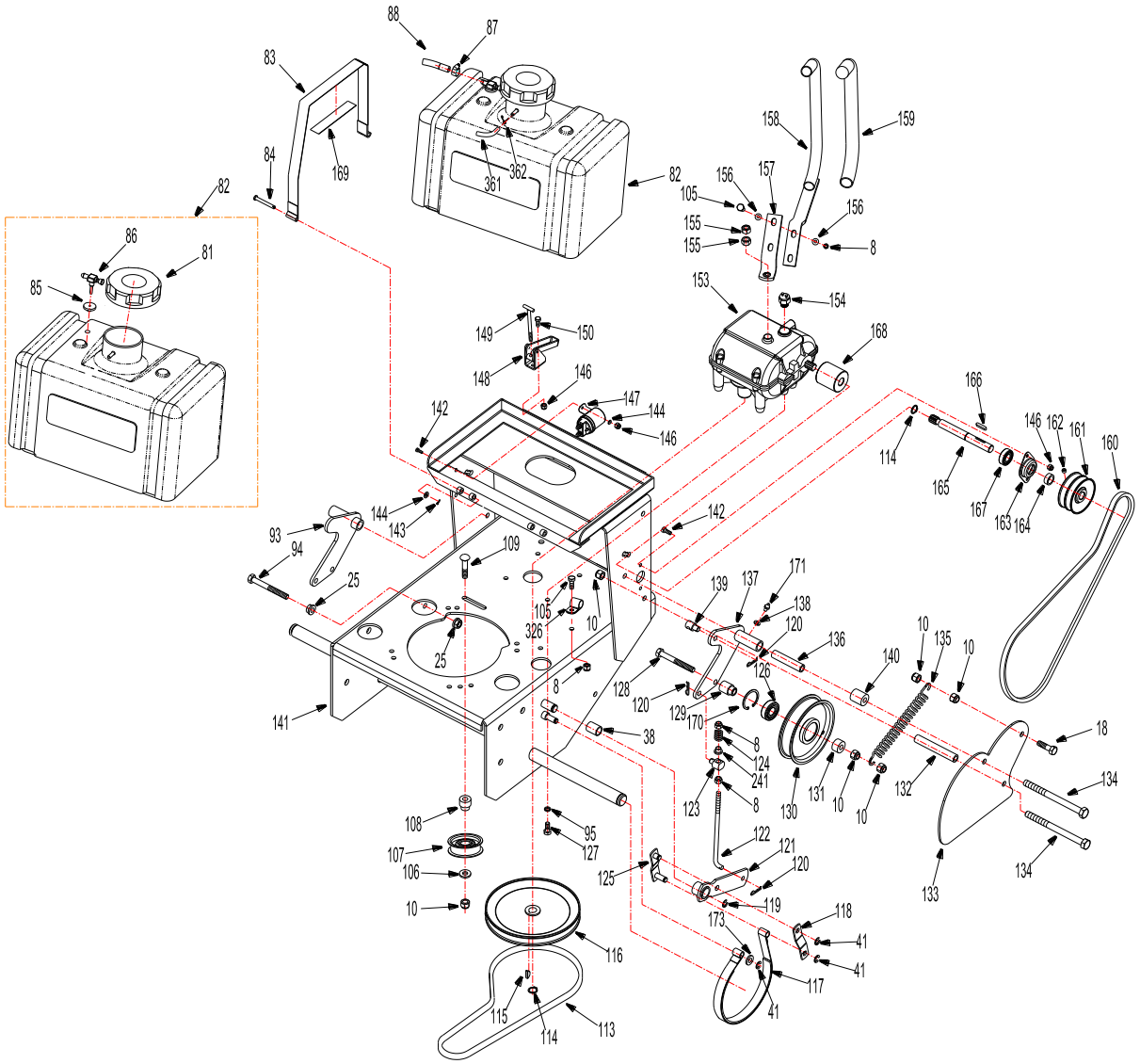

Rear Frame Assembly

REF.	PART NO.	DESCRIPTION	48	48E	42	42E
8	B6182-8	Locknut M8	×	×	×	×
10	B6182-10	Locknut M10	×	×	×	×
18	B5783-1040	Bolt M10×40	×	×	×	×
25	B6187.1-10	Nut M10	×	×	×	×
38	B2685-162025	Bearing 16×20×25	×	×	×	×
41	B896-8	Snap Ring M8	×	×	×	×
81	5204019	Gas Cap	×	×	×	×
82	363410	Fuel Tank Assembly	×	×	×	×
83	4805010	Fuel Tank Mounting Strap	×	×	×	×
84	4805003	Axis Pin	×	×	×	×
85	3307023B	Fuel Tank Grommet	×	×	×	×
86	363418	Fuel Tank Shut-off	×	×	×	×
87	B8870-16	Hose Clamp	×	×	×	×
88	4805008	Fuel Line	×	×	×	×
93	4806300	Idler Pulley Bracket, RH	×	×	×	×
94	B5782-1090	Bolt M10×90	×	×	×	×
95	B93-8	Split Lock Washer M8	×	×	×	×
105	B5783-830	Bolt M8×30	×	×	×	×
106	4808002	Washer	×	×	×	×
107	2800034	Idler Pulley, Wheel Drive	×	×	×	×
108	4808003	Bushing	×	×	×	×
109	B801-1050	Bolt M10×50	×	×	×	×
113	4800006	Transmission Drive Belt	×	×	×	×
114	B894.1-16	Spacer M16	×	×	×	×
115	4802011	Woodruff Key	×	×	×	×
116	4802300	Transmission Drive Pulley	×	×	×	×
117	4806430	Brake Band	×	×	×	×
118	4806401	Control Rod	×	×	×	×
119	B896-12	Snap Ring M12	×	×	×	×
120	4806002	Hair Pin	×	×	×	×
121	4806410	Brake Arm	×	×	×	×
122	3603003	Brake Rod	×	×	×	×
123	4806010	Swivel Joint	×	×	×	×
124	2800017	Compression Spring	×	×	×	×
125	4806420	Control Rod Weldment	×	×	×	×
126	B276-6203RS	Bearing 6203-2RS	×	×	×	×
127	4802012	Bolt 5/16-18×3/4	×	×	×	×
128	B5782-1085	Bolt M10×85	×	×	×	×
129	4806101	Bushing	×	×	×	×
130	5201012	Idler Pulley Assembly	×	×	×	×
131	4806102	Spacer	×	×	×	×
132	4806012	Spacer	×	×	×	×

REF.	PART NO.	DESCRIPTION	48	48E	42	42E
133	4806005	Belt Guard Plate	×	×	×	×
134	B5782-10125	Bolt M10×125	×	×	×	×
135	4806004	Tension Spring	×	×	×	×
136	4806007	Bushing	×	×	×	×
137	4806500	Idler Pulley Bracket, LH	×	×	×	×
138	B861.1-6	Washer M6	×	×	×	×
139	4806003	Swivel Joint	×	×	×	×
140	4806008	Spacer	×	×	×	×
141	4802100	Engine Frame Weldment	×	×	×	×
142	B5783-620	Hex Hd Bolt M6×20	×	×	×	×
143	B91-210	Cotter Pin 2×10	×	×	×	×
144	B97.1-6	Flat Washer M6	×	×	×	×
146	B6182-6	Locknut M6	×	×	×	×
147	4807104	Start-up Relay		×		×
148	4802710	Bracket (Rivet)	×	×	×	×
149	4802720	Control Rod	×	×	×	×
150	B5787-616	Hex Hd Bolt M6×16	×	×	×	×
153	4802500	Transmission（241-008）	×	×	×	×
154	4807006	Transmission Switch	×	×	×	×
155	4802010	Nut 3/8-24 UNF	×	×	×	×
156	B97.1-8	Flat Washer M8	×	×	×	×
157	4802007	Gear Shift	×	×	×	×
158	4802400	Gear Shift Extension	×	×	×	×
159	4802004	Rubber Pad	×	×	×	×
160	4800004	Drive Belt KC A-49	×	×	×	×
161	4802200A	Drive Pulley Assembly	×	×	×	×
162	B80-86	Screw M8×6	×	×	×	×
163	2800011	Spindle Housing	×	×	×	×
164	4802006	Bushing	×	×	×	×
165	4802005	Output Shaft	×	×	×	×
166	B1096-525	Key 5×25	×	×	×	×
167	99502H	Bearing 99502H-2RS	×	×	×	×
168	4802008	Spline Housing 240-888	×	×	×	×
169	4805002	Rubber Strip	×	×	×	×
170	B893.1-40	Snap Ring M40	×	×	×	×
171	B1152-6	Grease Fitting M6	×	×	×	×
173	B97.1-10	Flat Washer M10	×	×	×	×
241	2806010	Nylon Bushing	×	×	×	×
326	3601020	Wire Clamp（Kawasaki FS）	×	×	×	×
361	4805006	Fuel Line	×	×	×	×
362	3307041	Hose Clamp	×	×	×	×

Engine Assembly

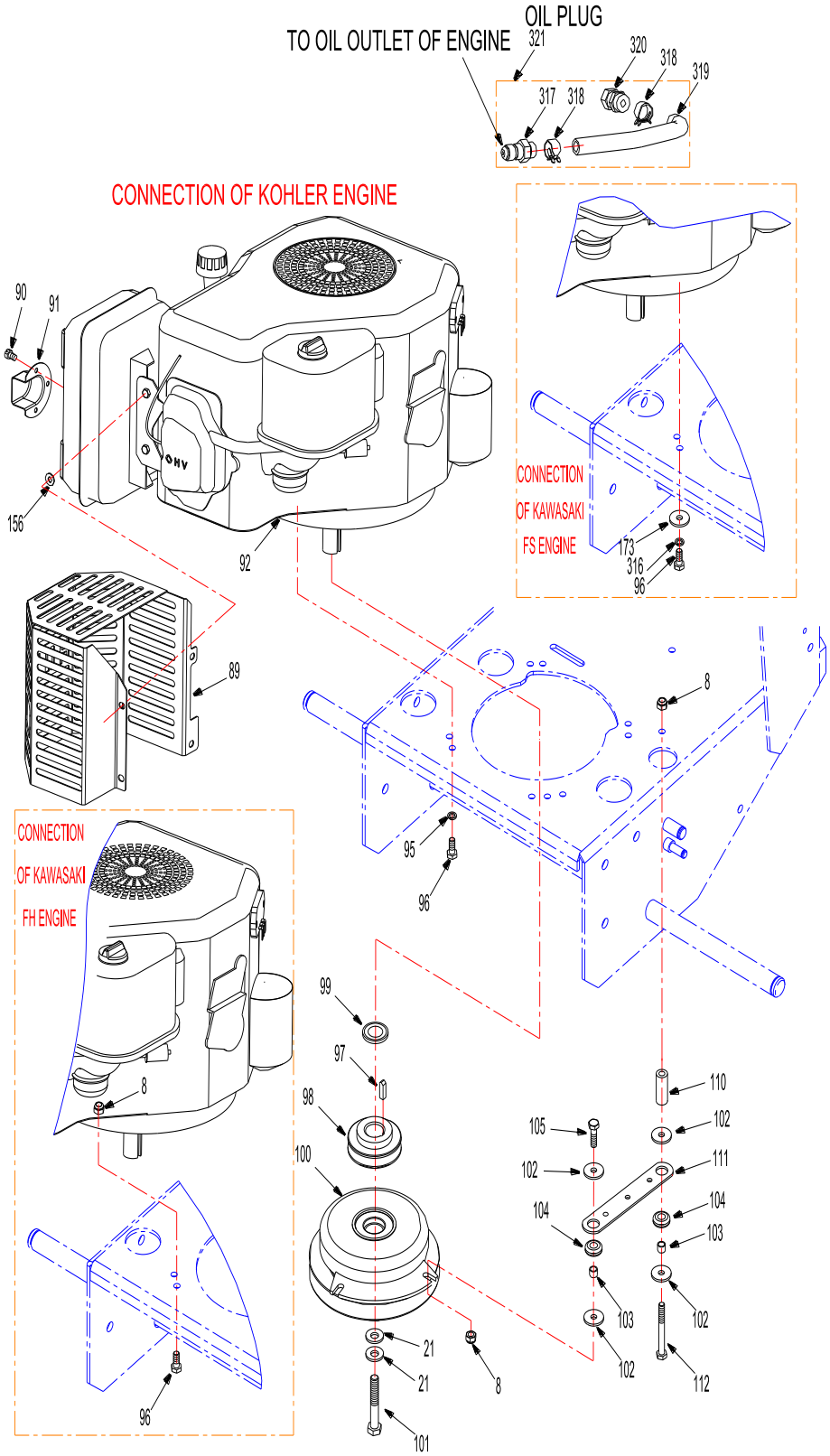

Engine Assembly

REF.	PART NO.	DESCRIPTION	48	48E	42	42E
8	B6182-8	Locknut M8	×	×	×	×
21	5201061	Washer	×	×	×	×
156	B97.1-8	Flat Washer M8 (Kohler)	×	×	×	×
173	B97.1-10	Flat Washer M10（Kawa FS）	×	×	×	×
89	4804007	Muffler Cover (Kohler)	×	×	×	×
90	B845-5513	Screw ST 5.5×13（Kohler）	×	×	×	×
91	4804008	Vent-pipe (Kohler)	×	×	×	×
92	4204004	15HP CV15-Electric (Kohler)				×
	4204004B	15HP FH430V- 22- Recoil (Kawasaki FH)			×	
	4204004A	15HP FH430V-S20- Electric(Kawasaki FH)				×
	4804004	18HP CV493-Electric (Kohler)		×		
	4804004B	17HP FH541-Recoil (Kawasaki FH)	×			
	4804004A	17HP FH541-Electric (Kawasaki FH)		×		
	4204021	16HP FH541-Electric (Kawasaki FS)				×
	4204022	16HP FH541- Recoil(Kawasaki FS)			×	
	4804021	18HP FH541- Electric (Kawasaki FS)		×		
	4804022	18HP FH541- Recoil (Kawasaki FS)	×			
95	B93-8	Split Lock Washer M8 (Kohler)	×	×	×	×
316	B93-10	Washer M10 (Kawasaki FS)	×	×	×	×
96	B5783-825	Hex Hd Bolt M8×25 (Kohler)	×	×	×	×
	B5783-840	Hex Hd Bolt M8×40(Kawasaki FH）	×	×	×	×
	5203435	Bolt 3/8-16UNC×1-1/2 (Kawasaki FS)	×	×	×	×

REF.	PART NO.	DESCRIPTION	48	48E	42	42E
97	4804002A	Key C6.35×20	×	×	×	×
98	4804003A	Transmission Drive Pulley	×	×	×	×
99	5203403	Spacer	×	×	×	×
100	4804005	Clutch	×	×	×	×
101	4804006	Bolt 7/16-20 UNF×2-1/2	×	×	×	×
102	5203408	Washer	×	×	×	×
103	5203409	Bushing	×	×	×	×
104	5203410	Rubber Ring M17		×	×	×
105	B5783-830	Bolt M8×30	×	×	×	×
110	4804001B	Bushing	×	×	×	×
111	5203411	Clutch Stop Strap	×	×	×	×
112	B5782-875	Bolt M8×75	×	×	×	×
317	5203421	Connector (Kawasaki FS）	×	×	×	×
318	B8870-19	Hose Clamp 13-19 (Kawasaki FS）	×	×	×	×
319	4804024	Oil Outlet Rubber Tube (Kawasaki FS）	×	×	×	×
320	5203422	Connector (Kawasaki FS）	×	×	×	×
325	4804023	Oil Outlet Rubber Tube (Kawasaki FS）	×	×	×	×

Front Frame Assembly

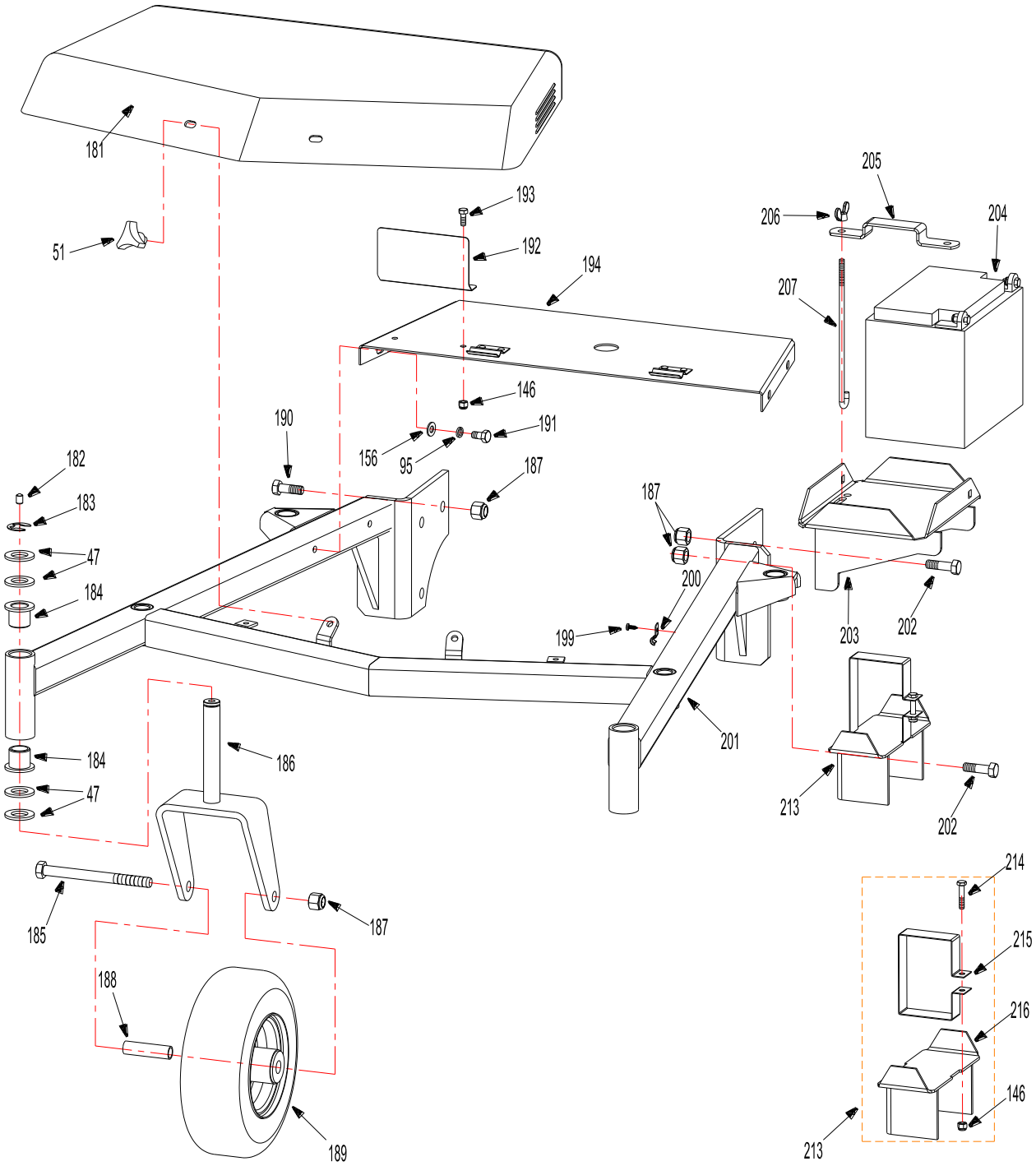

Front Frame Assembly

REF.	PART NO.	DESCRIPTION	48	48E	42	42E
47	3601017	Washer M20	×	×	×	×
51	3302190	Three-Arm Knob	×	×	×	×
95	B93-8	Split Lock Washer M8	×	×	×	×
146	B6182-6	Locknut M6	×	×	×	×
156	B97.1-8	Flat Washer M8	×	×	×	×
181	4800010	Belt Cover	×	×	×	×
182	B1155-8	Grease Fitting M8	×	×	×	×
183	B896-15	Snap Ring M15	×	×	×	×
184	3301003	Flange Bushing	×	×	×	×
185	B5782-12140	Bolt M12×140	×	×	×	×
186	4803200	Caster Wheel Yoke	×	×	×	×
187	B6182-12	Locknut M12	×	×	×	×
188	4803001	Axle Tube	×	×	×	×
189	4803100	Caster Wheel Assembly	×	×	×	×
190	B5783-1230	Bolt M12×30	×	×	×	×
191	B5783-816	Hex Hd Bolt M8×16	×	×	×	×
192	4800020	Heat Insulation Plate (Kohler)	×	×	×	×

REF.	PART NO.	DESCRIPTION	48	48E	42	42E
193	B5783-616	Hex Hd Bolt M6×16	×	×	×	×
194	4212000	Belt Cover			×	×
	4812000	Belt Cover	×	×		
199	B15856-4819	Screw ST 4.8×19	×	×	×	×
200	XSZ56-1-18	Cable Clip	×	×	×	×
201	4203300A	Caster Mount Weldment			×	×
	4803300A	Caster Mount Weldment	×	×		
202	B5783-1235	Bolt M12×35	×	×	×	×
203	4814100	Battery Tray		×		×
204	5208002	12V Battery		×		×
205	5208202	Battery Strap		×		×
206	B62-6	Wing Nut M6		×		×
207	5208203	Battery Clamp Bolt		×		×
213	4814120	Battery Bracket Assembly	×		×	
214	B5783-630	Hex Hd Bolt M6×30	×		×	
215	4814121	Battery Strap	×		×	
216	4814130	Battery Tray	×		×	

Handle Bar and Console

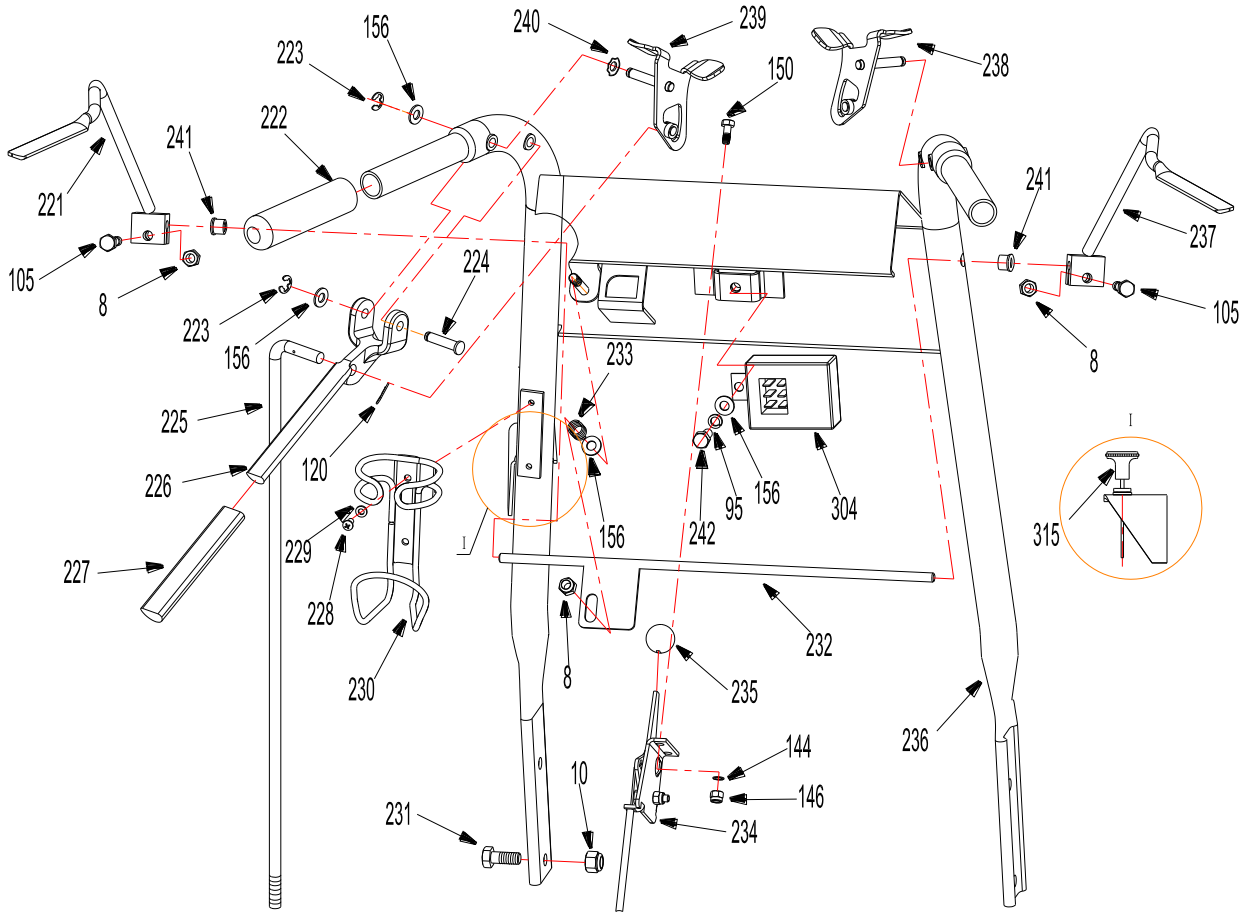

Handle Bar and Console

REF.	PART NO.	DESCRIPTION	48	48E	42	42E
8	B6182-8	Locknut M8	×	×	×	×
10	B6182-10	Locknut M10	×	×	×	×
95	B93-8	Split Lock Washer M8		×		×
105	B5783-830	Bolt M8×30	×	×	×	×
120	4806002	Hair Pin	×	×	×	×
144	B97.1-6	Flat Washer M6	×	×	×	×
146	B6182-6	Locknut M6	×	×	×	×
150	B5787-616	Hex Hd Bolt M6×16	×	×	×	×
156	B97.1-8	Flat Washer M8	×	×	×	×
221	4806710	Operator Presence Lever, LH	×	×	×	×
222	3306005	Handle Grip	×	×	×	×
223	B896-6	Snap Ring M6	×	×	×	×
224	4806011	Axis Pin	×	×	×	×
225	4806006	Brake Control Rod	×	×	×	×
226	4806009	Steering Lever, LH	×	×	×	×
227	4806014	Handle Grip	×	×	×	×
228	B67-510	Screw M5×10	×	×	×	×
229	B93-5	Washer M5	×	×	×	×
230	2806090	Cup Holder	×	×	×	×

REF.	PART NO.	DESCRIPTION	48	48E	42	42E
231	B5787-1030	Bolt M10×30	×	×	×	×
232	4806720	Operator Presence Control Rod	×	×	×	×
233	4806013	Compression Spring	×	×	×	×
234	3306004	Throttle Control Assembly (Kohler）	×	×	×	×
	3336019	Throttle Control Assembly (Kawa）	×	×	×	×
235	3306030	Throttle Control Knob	×	×	×	×
236	4806200	Handle Bar Assembly	×	×	×	×
	4806200A	Handle Bar Assembly (Kawa FS)	×	×	×	×
237	4806730	Operator Presence Lever, RH	×	×	×	×
238	4806810	Neutral Latch Bracket-RH	×	×	×	×
239	4806910	Neutral Latch Bracket-LH	×	×	×	×
240	B955-8	Disc Spring Washer	×	×	×	×
241	2806010	Bushing	×	×	×	×
242	B5783-818	Hex Hd Bolt M8×18		×		×
304	4807103	Relay Set		×		×
315	4806020	Choke Cable Assembly (Kawasaki FS)	×	×	×	×

Electrical Start-up Wiring Harness

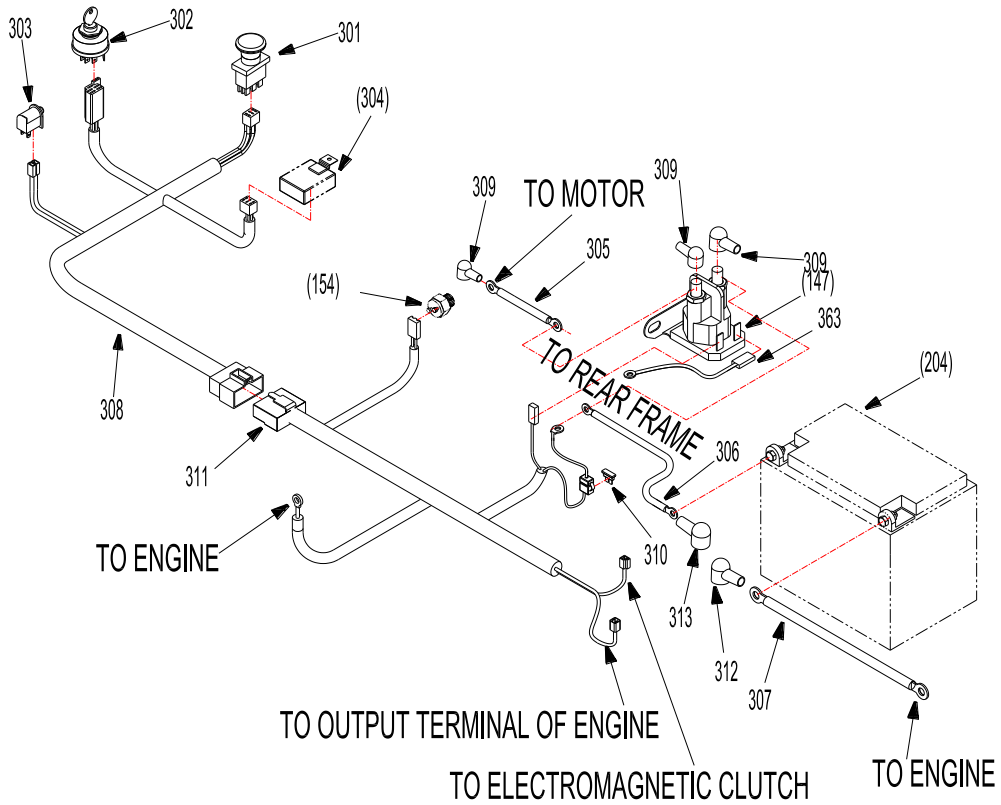

REF.	PART NO.	DESCRIPTION	48E	42E
147	5208043	Start-up Relay	×	×
154	4807006	Transmission Switch	×	×
204	5208002	12V Battery	×	×
301	4807005	Blade Switch	×	×
302	5208003	Ignition Switch (Electric)	×	×
303	2808001	Operator Presence Control Switch	×	×
304	4807103	Relay Set	×	×
305	2808106	Power Wire	×	×
306	4807105	Positive Cable (Battery)	×	×
307	4807106	Negative Cable (Battery)	×	×
308	4807108A	Wiring Harness, Handle (42&48)	×	×
309	2808107	Terminal Insulator	×	×
310	4807107	Fuse 30A	×	×
311	4807116A	Wiring Harness, Console (Kohler)	×	×
	4807117A	Wiring Harness, Console (Kawasaki）	×	×
312	3312031	Battery Boot (negative)	×	×
313	3312032	Battery Boot (positive)	×	×
363	3208053	Ground Wire	×	×

Recoil Start-up Wiring Harness

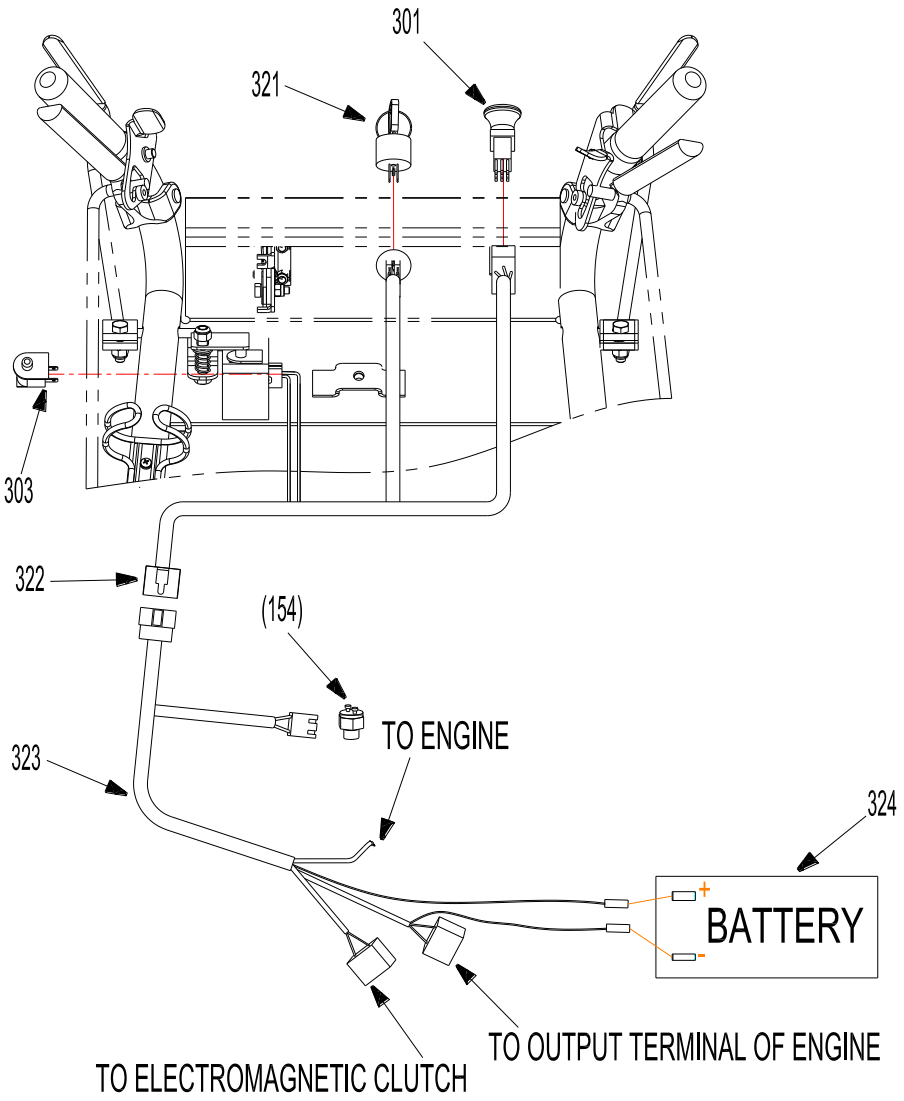

REF.	PART NO.	DESCRIPT ON	48（Kohler）	48(Kawa)	42 (Kohler)	42(Kawa)
154	4807006	Transmission Switch	×	×	×	×
301	4807005	Blade Switch	×	×	×	×
303	2808001	Operator Presence Control Switch	×	×	×	
321	2808019	Ignition Switch	×	×	×	×
322	4807027A	Wiring Harness, Handle	×	×	×	×
323	4807028A	Wiring Harness, Console (Kohler)	×		×	
	4807029A	Wiring Harness, Console (Kawasaki)		×		×
324	4807026	Battery	×	×	×	×

Safety/Operation and Product Decals

331

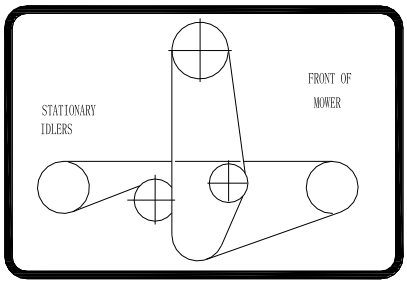

333

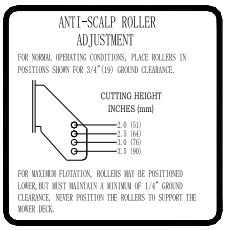

334

335

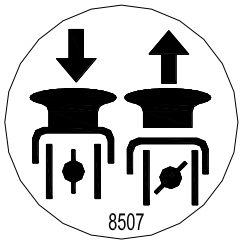

352

337

338

339

340

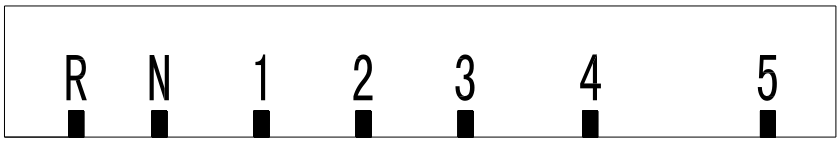

341

REF.	PART NO.	DESCRIPTION	48	48E	42	42E
331	8413	Decal, Danger Keep Clear	×	×	×	×
333	8419	Decal, Belt Routing	×	×	×	×
334	8310	Decal, Roller Adjustment	×	×	×	×
335	8045	Decal, Caution Guard	×	×	×	×
352	8507	Decal, Choke	×	×	×	×

REF.	PART NO.	DESCRIPTION	48	48E	42	42E
337	8403	Decal, Danger Hot	×	×	×	×
338	8408	Decal, Worldlawn	×	×	×	×
339	8304	Decal, Float-Force 48	×	×	×	×
340	8404	Decal, No Step	×	×		
341	8401	Decal, Speed Select	×	×	×	×

Safety/Operation and Product Decals

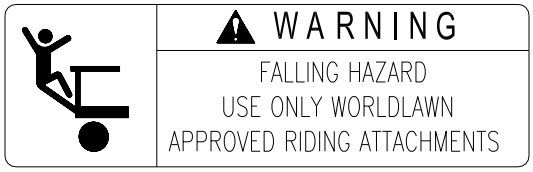

342

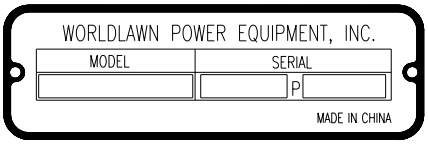

343

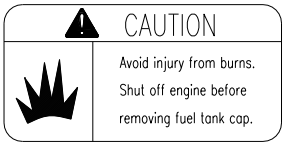

344

345

346

347

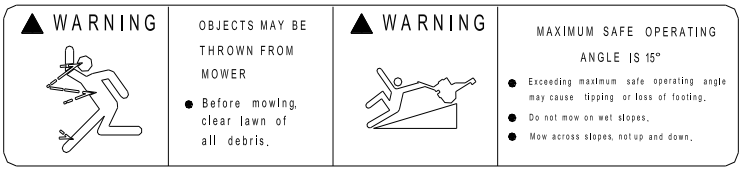

348

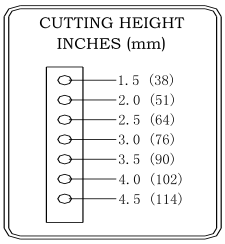

349

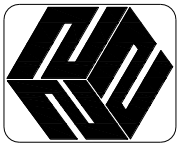

364

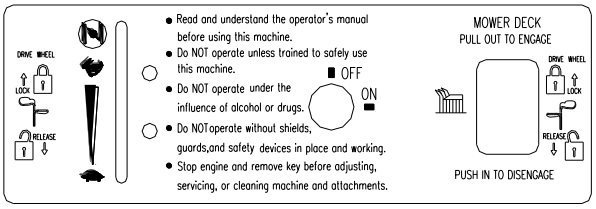

350

EMISSION CONTROL INFORMATION
JIANGSU WORLD PLANT-PROTECTING MACHINERY CO.,LTD
THIS EQUIPMENT MEETS U.S. EPA EVAP STANDARDS
EQUIPMENT FAMILY NAME:BJWPPNHEQ001

365

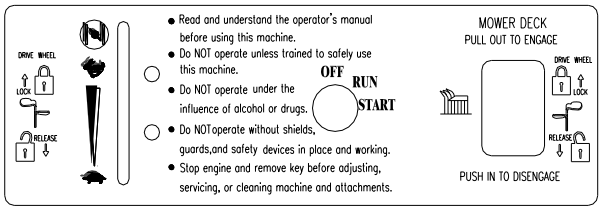

351

REF.	PART NO.	DESCRIPTION	48	48E	42	42E
342	8410	Decal, Falling Hazard	×	×	×	×
343	8046	Serial Number Plate	×	×	×	×
344	8402	Decal, Caution Avoid Injury	×	×	×	×
345	8374	Decal, Float Force 48	×	×		
346	8373	Decal, Float Force 42			×	×
347	8405	Decal, Float Force 42			×	×

REF.	PART NO.	DESCRIPTION	48	48E	42	42E
348	8411	Decal, Warning Objects Thrown	×	×	×	×
349	8406	Decal, Cutting Height	×	×	×	×
350	8409	Decal, Throttle (Recoil)	×		×	
351	8418	Decal, Throttle (Electric)		×		×
364	8378	Decal, Worldlawn Logo	×	×	×	×
365	8602	EPA Decal	×	×	×	×

Grass Catcher Assembly (Accessory)

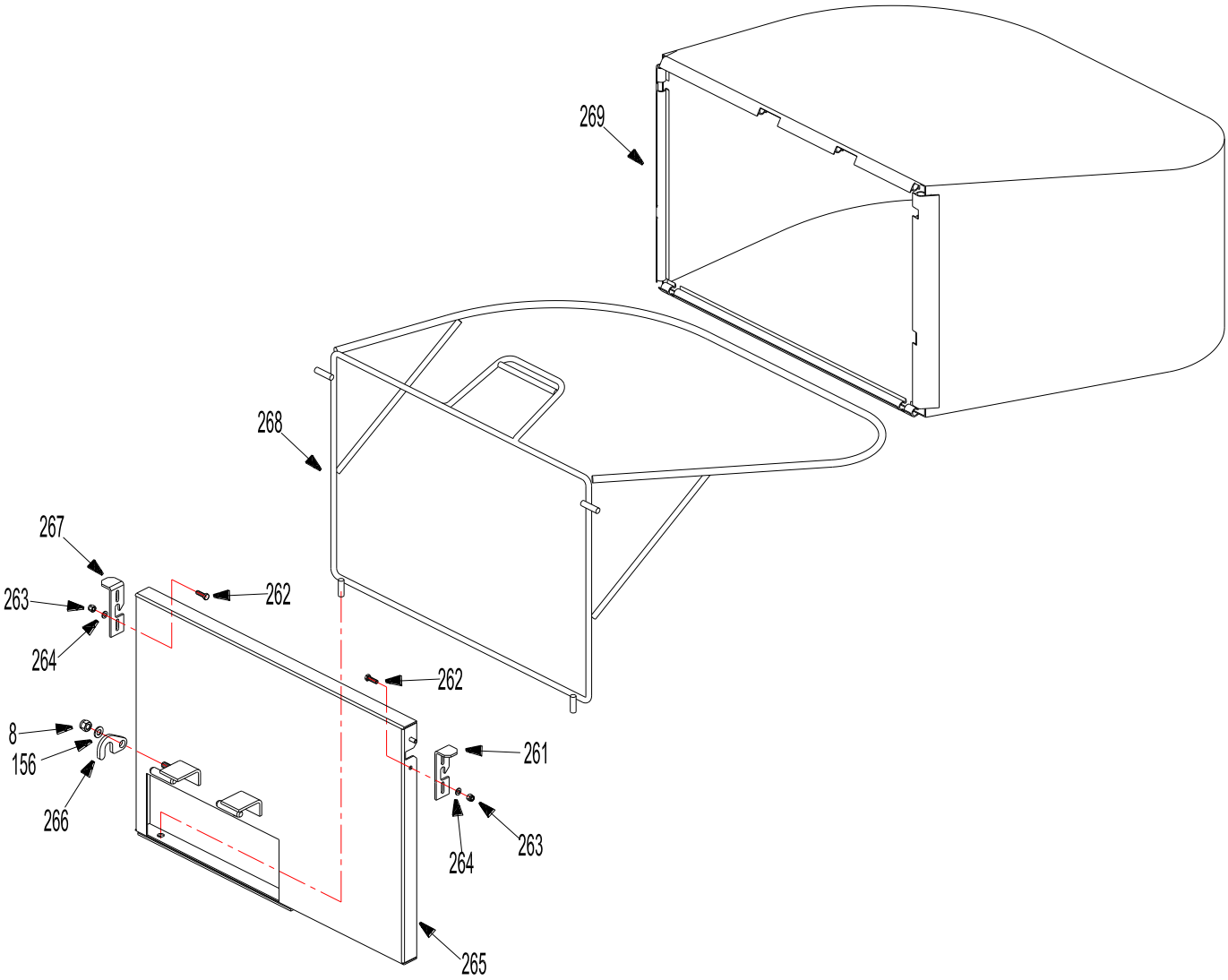

REF.	PART NO.	DESCRIPTION	48	48E	42	42E
8	B6182-8	Locknut M8	×	×	×	×
156	B97.1-8	Flat Washer M8	×	×	×	×
261	2802202	Grass Catcher Latch, LH	×	×	×	×
262	B823-520	Screw M5×20	×	×	×	×
263	B6182-5	Locknut M5	×	×	×	×
264	B97.1-5	Flat Washer M5	×	×	×	×

REF.	PART NO.	DESCRIPTION	48	48E	42	42E
265	4810110A	Grass Catcher Mount Weldment	×	×	×	×
266	4810101	Grass Catcher Lock Catch	×	×	×	×
267	2802203	Grass Catcher Latch, RH	×	×	×	×
268	4810200	Grass Catcher Wire Frame	×	×	×	×
269	4810300A	Grass Catcher Bag	×	×	×	×

Notes:

Notes:

WORLDLAWN®

Worldlawn Power Equipment, Inc.

Industrial Park 2415 Ashland Ave. Beatrice, NE 68310

Phone: (402) 228-4255 Fax: (402) 223-4103

www.worldlawnpowerequip.com

Form No. 48102-201111